DECLARATION OF COVENANTS CONDITIONS AND RESTRICTIONS

FOR

THE FIELDS

Instrument prepared by and after recording return to:

David P. Barker, Esq.
Dean, Mead, Egerton, Bloodworth, Capouano & Bozarth, P.A.
420 S. Orange Ave., Suite 700
Orlando, FL 32801
(407) 428-5118

IF YOU PURCHASE A UNIT IN THIS DEVELOPMENT YOU WILL BE SUBJECT TO ADDITIONAL COSTS. A SPECIAL ASSESSMENT WILL BE ADDED TO YOUR TAX BILL. THIS NON-AD VALOREM TAX ASSESSMENT WILL BE IN ADDITION TO ALL OTHER PROPERTY TAXES, HOA FEES AND ASSESSMENTS. THIS COST IS ESTIMATED AT $900.00-$1,400.00 PER YEAR DEPENDING ON SIZE OF THE LOT AND WILL BE LEVIED TO PAY DEBT SERVICE ON THE BONDS ISSUED BY THE DISTRICT AND ADMINISTRATIVE COSTS.

TABLE OF CONTENTS

DECLARATION OF COVENANTS, CONDITIONS AND RESTRICTIONS

FOR

THE FIELDS

1. DEFINITIONS....2
1.1 "Architectural Reviewer" 2
1.2 "Assessment" s. 2
1.3 "Association" 2
1.4 "Board of Directors" or "Board" 2
1.5 "Builder" 2
1.6 "CDD" 2
1.7 "Common Area" 2
1.8 "Common Expenses" 2
1.9 "Conservation Area". 2
1.10 "Developer"....2
1.11 "Declaration"....2
1.12 "Family" or "Single Family"....3
1.13 "Governing Documents". 3
1.14 "Guest" or "Guests". 3
1.15 "Institutional Mortgagee"....3
1.16 "Lease". 3
1.17 "Member"....3
1.18 "Neighborhood" 3
1.19 "Neighborhood Association". 3
1.20 "Neighborhood Assessments"....3
1.21 "Neighborhood Common Area"....4
1.22 "Neighborhood Documents". 4
1.23 "Neighborhood Expenses". 4
1.24 "Owner". 4
1.25 "Parcel" or "Parcels" 4
1.26 "Preservation Area" 4
1.27 "Primary Occupants" 4
1.28 "Property" 4
1.29 "Rules and Regulations" 4
1.30 "SFWMD"....4
1.31 "Single Family Residence" 4
1.32 "Stormwater Management System" 5
1.33 "Tenant" or "Tenants" 5
1.34 "The Fields" 5
1.35 "Turnover Date" 5
1.36 "Turnover Meeting". 5
1.37 "Unit". 5
1.38 "Wetland"....5
2. CDD; PROMOTIONAL TERMS....5
2.1 CDD. 5

2.2 "DiVosta", "The Fields" or Logo. 6
3. ASSOCIATION: MEMBERSHIP: VOTING RIGHTS. 6
3.1 Articles of Incorporation. 6
3.2 Bylaws. 6
3.3 Delegation of Management 6
3.4 Membership. 6
3.5 Class "B" Membership. 7
3.6 Voting Interests. 7
3.7 Approval or Disapproval of Matters.. 7
3.8 Change of Membership.. 7
3.9 Termination of Membership. 7
3.10 Association As Owner of Parcels. 8
3.11 Membership Roster.. 8
3.12 Limitation on Liability.. 8
3.13 Board of Directors. 8
3.14 Powers and Duties. 8
3.15 Petition for Receivership. 8
4. COVENANT FOR ANNUAL AND SPECIAL ASSESSMENTS AND CHARGES. 8
4.1 Creation of Lien and Personal Obligation for Assessments and Charges. 8
4.2 Share of Assessments.. 9
4.3 Developer Subsidy. 9
4.4 Establishment of Liens.. 10
4.5 Priority of Liens.. 11
4.6 Collection of Assessments and Charges. 11
4.7 Certificate. . 12
4.8 Neighborhood Assessments.. 12
4.9 Initial Capital Contributions 12
4.10 Resale Capital Assessments.. 12
4.11 Enforcement Against Tenants.. 13
5. ARCHITECTURAL AND AESTHETIC CONTROL. 13
5.1 Necessity of Architectural Review and Approval.. 13
5.2 Architectural Review. 14
5.3 Powers and Duties of Architectural Reviewer. 14
5.4 Architectural Control by Developer.. 15
5.5 Garages. 16
5.6 Encroachments Into Common Areas Prohibited.. 16
5.7 Developer and Builder Construction. 16
5.8 Prohibitions on Grading Modifications and Impairment of Drainage. 16
5.9 Other Approvals Required.. 16
5.10 No Waiver of Future Approvals.. 16
6. PROPERTY RIGHTS: EASEMENTS. 16
6.1 Use of Common Area. 16
6.2 Easements. 18
6.3 Town House Easements. 18
6.4 Partition: Separation of Interest. 19
6.5 Construction; Maintenance. 19
6.6 Additional Easements.. 19
6.7 Polling Place Requirement.. 20
7. MAINTENANCE OF COMMON AREA, PARCELS AND UNITS. 20
7.1 Association Maintenance.. 20
7.2 Palm Beach County Tree/Root Provisions.. 20
7.3 Owner Maintenance. 20
7.4 Alterations and Additions to Common Area.. 23
7.5 Enforcement of Maintenance. 23
7.6 Negligence. 23

7.7 Developer's Lien.. 24
7.8 Stormwater Management System. 24
8. INSURANCE 28
8.1 Casualty. 28
8.2 Liability.. 28
9. USE RESTRICTIONS. 28
9.1 Residential Purposes. 28
9.2 Major Roadways. 29
9.3 Signs.. 29
9.4 Nuisance.. 30
9.5 Underground Utility Lines and Services.. 30
9.6 Common Area.. 30
9.7 Pets and Animals.. 30
9.8 Trucks, Commercial Vehicles, Recreation Vehicles, Mobile Homes, Boats, Campers and Trailers. 30
9.9 Exterior Colors; Building Materials 31
9.10 Landscaping.. 31
9.11 Driveways and Parking Areas.. 31
9.12 Antennas and Flagpoles.. 31
9.13 Outdoor Equipment.. 32
9.14 Air Conditioning and Heating Equipment. 32
9.15 Solar Collectors.. 32
9.16 Walls, Fences, Window Coverings and Hurricane Shutters. 32
9.17 Lighting.. 32
9.18 Developer. 32
9.19 Clothes Drying Area/Clotheslines. 32
9.20 Pools. 32
9.21 Drones and Other Aerial Devices. 32
9.22 Oil, Gas and Mineral Rights. 33
9.23 Subdivision of Parcels.. 33
9.24 Workforce Housing Program. 33
9.25 Environmental Provisions. 33
10. DEVELOPER'S AND ASSOCIATION'S EXCULPATION. 34
11. ENFORCEMENT OF COVENANTS AND ABATEMENT OF VIOLATIONS 34
11.1 Legal Action. 34
11.2 Entry by Association and/or the Developer 35
11.3 Fines 35
11.4 Alternative Method for Resolving Disputes with Developer and Developer Appointees. 35
12. LEASING, CONVEYANCE, DISPOSITION 36
12.1 Forms of Ownership: 36
12.2 Transfers and Leases.. 37
12.3 Procedures. 37
12.4 Leasing.. 39
12.5 Exceptions With Respect to the Developer and Institutional Mortgagees.. 39
12.6 Unapproved Leases.. 39
13. DEVELOPER'S RIGHTS AND DUTIES.. 39
13.1 Developer's and Builder's Use.. 39
13.2 Assignment of Development Rights. 39
14. DURATION OF COVENANTS: AMENDMENT OF DECLARATION: 39
14.1 Duration of Covenants.. 40
14.2 Proposal.. 40
14.3 Vote Required. . 40
14.4 Certificate; Recording. 40
14.5 Limitation on Amendments. 40
14.6 Developer Amendment of Documents. . 41
15. TURNOVER.. 41

16. GENERAL PROVISIONS.....41
16.1 Waiver.. 42
16.2 Severability. 42
16.3 Headings. 42
16.4 Notices.....42
16.5 Interpretation. 42

DECLARATION OF COVENANTS, CONDITIONS AND RESTRICTIONS

FOR

THE FIELDS

DIVOSTA HOMES, L.P., a Delaware limited partnership, the present fee title owner of the property legally described in Exhibit "A" hereto (the "Property"), hereinafter called "Developer", to its grantees, successors and assigns and all future owners of Parcels located in The Fields, as more particularly described in Exhibit "A" attached hereto and made a part hereof, hereby makes the following Declaration of Covenants, Conditions and Restrictions. The Fields Homeowner's Association, Inc., a Florida not-for-profit corporation, hereby joins in the execution of this Declaration of Covenants, Conditions and Restrictions.

It is the intent of the Developer to ultimately develop the Property as a planned unit development named "The Fields" consisting of seven hundred ten (710) residential Units. Upon recording this Declaration, the Developer hereby submits the real property described in Exhibit "A" to the terms and conditions of this Declaration.

The Developer reserves the right to seek approval from applicable zoning and regulatory authorities to increase the number of residential Units that may be constructed in The Fields and therefore the number of Parcels that may be subjected to this Declaration. Accordingly, the Developer reserves the right to subject additional real property to this Declaration that is not legally described in Exhibit "A". If the Developer adds and subjects real property that is not described in Exhibit "A" or obtains approval from zoning and regulatory authorities to increase the maximum number of Parcels that may be conveyed, the Turnover Date set forth in Section 15 below shall be extended.

In addition, the Developer reserves the right to amend this Declaration in order to remove real property that it owns from the terms of this Declaration, provided that it shall not have the authority to remove Common Area that has been improved by a structure intended for recreational purposes. In the event the Developer removes real property from the terms of this Declaration ("Removed Property"), the Developer hereby reserves the right, on behalf of its successors and assigns, to grant the owners of residential units in the real property that has been submitted to and/or removed from the terms of this Declaration, use and easement rights to all or portions of the Removed Property and/or the Common Area, all upon such terms as the Developer may impose in an agreement recorded in the Public Records of Palm Beach County, Florida.

For the purpose of enhancing and protecting the value, attractiveness and desirability of the residential units constituting such development, the Developer hereby declares that all of the real property described and each part thereof shall be developed as a planned unit development and shall be held, sold and conveyed only subject to the following easements, covenants, conditions and restrictions which shall constitute covenants running with the land and shall be binding on all parties having any right, title or interest in the above described property, or any part thereof, their heirs, successors and assigns and shall inure to the benefit of each Owner thereof and the Association.

Although The Fields is anticipated to have nine hundred twenty (920) residential Units, the Developer makes no representation or warranty regarding the timing of or guarantees the construction of residential Units or the number or types of residential Units which will ultimately be constructed. From time to time, the Developer and others may present to the public certain renderings, plans and models showing possible future development of The Fields and surrounding areas. The Developer does not

represent or warrant in any way that future improvements in The Fields and surrounding areas will be actually developed or developed in accordance with such renderings, plans and models.

1. DEFINITIONS. The terms used in this Declaration and its recorded exhibits shall have the definitions set forth in Chapter 720, Florida Statutes (2016) (the "Act"), unless otherwise defined below (it being the intent hereof that future amendments to the Act not be retroactively applied to impair substantive rights of the Developer set forth herein):

1.1 "Architectural Reviewer" means and refers to the entity responsible for review and approval of construction and alterations to improvements, as more particularly described in Section 5 herein.

1.2 "Assessment" shall have the meaning set forth in Section 720.301(1) of the Act.

1.3 "Association" shall mean and refer to The Fields Homeowner's Association, Inc., a Florida corporation not-for-profit.

1.4 "Board of Directors" or "Board" means and refers to the Board of Directors of the Association.

1.5 "Builder" means and refers to a builder, contractor or other person who purchases one (1) or more Parcels from the Developer or a Builder to construct improvements thereon for resale. There may be more than one (1) Builder in The Fields.

1.6 "CDD" means a community development district pursuant to Chapter 190, Florida Statutes, if established, with jurisdiction over the Property.

1.7 "Common Area" means and refers to all real property which is now or hereafter owned or leased by the Association or dedicated for use or maintenance by the Association or its Members, including, regardless of whether title has been conveyed to the Association: real property the use of which is dedicated to the Association or its Members by a recorded plat; or real property committed by this Declaration to be leased or conveyed to the Association. Common Area shall be conveyed by Developer to the Association on or prior to the Turnover Date in accordance with Section 6.1 below.

1.8 "Common Expenses" means and refers to all expenses properly incurred by the Association in the performance of its duties.

1.9 "Conservation Area" means and refers to that portion of the Common Area, if any, other than a Preservation Area, which may include native habitats set aside to fulfill open space requirements, and which is intended to be maintained by the Association without specific management guidelines.

1.10 "Developer" means and refers to DiVosta Homes, L.P., a Delaware limited partnership. Whenever the term Developer is used in the Governing Documents, such term shall always be deemed to include any successor or assign in interest to the Developer's development rights and obligations, provided that such is evidenced by a written instrument and recorded in the Public Records of Palm Beach County, Florida.

1.11 "Declaration" means and refers to this Declaration of Covenants, Conditions and Restrictions, and any amendments hereto.

1.12 "Family" or "Single Family" shall refer to one (1) natural person (as opposed to an artificial entity); or a group of two (2) or more natural persons living together each of whom is related to each of the others by blood, marriage, legal custody or adoption; or not more than two (2) persons not so related, who reside together as a single housekeeping unit, along with their children, if any.

1.13 "Governing Documents" means and refers to this Declaration, the Articles of Incorporation, Bylaws, Rules and Regulations, Architectural Review Guidelines and the Resolutions of the Association. In the event of a conflict in the interpretation of the Governing Documents, they shall be applied in the order of priority stated above.

1.14 "Guest" or "Guests" means any person or persons physically present in, or occupying a Unit on a temporary basis at the invitation of the Owner or other legally permitted occupant, without the payment of consideration, or using the Common Area at the invitation of an Owner or other legally permitted occupant.

1.15 "Institutional Mortgagee" means the mortgagee or assignee of a first mortgage against a Parcel or Unit, which mortgagee or assignee is a bank, savings and loan association, mortgage company, real estate or mortgage investment trust, pension or profit sharing trust, the Federal Housing Administration, the Veterans Administration, or any agency of the United States of America. The term also refers to any holder of a mortgage against a Parcel or Unit which mortgage is guaranteed or insured (as evidenced by a recorded instrument) by the Federal Housing Administration, the Veterans Administration, any agency of the United States of America or by any other public or private agency engaged in the business of purchasing, guaranteeing or insuring residential mortgage loans, and their successors and assigns. An "Institutional Mortgage" is a mortgage held by an Institutional Mortgagee encumbering a Unit.

1.16 "Lease" means the grant by an Owner of a temporary right to occupy the Owner's Unit for valuable consideration.

1.17 "Member" means and refers to all persons who are members of the Association as provided in the Governing Documents, including, without limitation, the provisions of Section 3 below.

1.18 "Neighborhood" means and refers to each separately developed residential area, if any, which is denominated by the Developer as a Neighborhood, and which is comprised of one (1) or more housing types subject to this Declaration, in which owners may have common interests other than those common to all Members, such as a common theme, entry feature, development name, and common areas or facilities which are not available for use by all Members. For example, and by way of illustration and not limitation, an attached home residential area, a zero-lot-line Single Family home residential area, and a Single Family home residential area may constitute separate Neighborhoods, or may be combined to form a single Neighborhood. In addition, each property developed as a Neighborhood may be subject to division into more than one (1) Neighborhood upon development. Neighborhoods may be combined or divided as provided in this Declaration. The Developer shall not have any obligation to create Neighborhoods, Neighborhood Associations, Neighborhood Common Area and Neighborhood Documents. Unless the Developer creates Neighborhood(s), there shall not be any Neighborhood Expenses and Neighborhood Assessments.

1.19 "Neighborhood Association" shall mean the entity, if any, created for the benefit of Owners within a specific Neighborhood.

1.20 "Neighborhood Assessments" shall mean Assessments for Neighborhood Expenses provided for in this Declaration, as amended from time to time, which shall be used for the benefit of the

Owners and occupants of the Parcels against which the specific Neighborhood Assessment is levied, and to maintain the properties within a specific Neighborhood. Neighborhood Assessments, if any, shall be assessed solely against the Owners in a particular Neighborhood.

1.21 "Neighborhood Common Area" shall mean all real property including any improvements and fixtures thereon, owned, leased or dedicated for use or maintenance by a Neighborhood Association for the common use and enjoyment of its members, if any.

1.22 "Neighborhood Documents" shall mean and refer to the Declaration of Covenants or Declaration of Condominium for a Neighborhood and the Articles of Incorporation, Bylaws, Rules and Regulations and resolutions of a Neighborhood Association, if any. The provisions of the Neighborhood Documents shall be cumulative with the provisions of the Governing Documents; however, in the event of conflict between or among the provisions of the Neighborhood Documents and the Governing Documents, the latter shall be superior to the Neighborhood Documents. The foregoing priorities shall not prevent enforcement by a Neighborhood Association of provisions of the Neighborhood Documents that are stricter than those of the Governing Documents.

1.23 "Neighborhood Expenses" shall mean all expenses properly incurred by the Association for a particular Neighborhood, if any.

1.24 "Owner" means and refers to any person or persons, entity or entities, who is or are the record owner(s) of the fee simple title to any Parcel in The Fields.

1.25 "Parcel" or "Parcels" means any platted or unplatted lot, development phase, tract, condominium unit, or other discrete area of real property within The Fields which is capable of separate conveyance and has been subjected to this Declaration, but shall exclude: Common Area; all property dedicated or deeded to Palm Beach County, Florida, SFWMD, or any other governmental authority, taxing district, the CDD, or a public or private utility, including, without limitation, roads, environmental buffers, landscape buffers, preservation and conservation areas and lakes. Wherever herein the term "Parcel" is used in this Declaration, it shall be interpreted as if followed by the words "and Unit constructed thereon" except where the context clearly requires otherwise.

1.26 "Preservation Area" means that portion of the Common Area, if any, which is intended to be preserved and maintained by the Association in its existing (or restored) natural and native condition in perpetuity.

1.27 "Primary Occupants" means the two (2) natural persons approved for occupancy, together with their Family, in accordance with Section 12 herein.

1.28 "Property" shall mean all of the real property described on Exhibit "A" attached hereto.

1.29 "Rules and Regulations" means and refers to the rules and regulations adopted, amended and rescinded from time to time by resolution of the Board of Directors.

1.30 "SFWMD" means the South Florida Water Management District.

1.31 "Single Family Residence" means and refers to a Unit which is restricted to occupancy only by the Owner or Primary Occupants and their Family, Guests and Tenants as further provided herein.

1.32 "Stormwater Management System" means and refers to a drainage system consisting of swales, inlets, culverts, retention ponds, ditches, water control features, floodplain compensation areas, wetlands and any associated buffer areas and wetland mitigation areas, detention ponds, lakes, outfalls, storm drains and other similar and/or related improvements, and all connecting pipes and easements, to the extent that any such facilities, areas or conditions apply to The Fields, which is designed and constructed or implemented to control discharges necessitated by rainfall events, incorporating methods to collect, convey, store, absorb, inhibit, treat, use or reuse water to prevent or reduce flooding, overdrainage, environmental degradation, and water pollution or otherwise affect quantity and quality of discharges from the system, as permitted pursuant to the permit issued by the SFWMD.

1.33 "Tenant" or "Tenants" means and refers to one who leases or rents from an Owner and holds temporary possession of a Unit.

1.34 "The Fields" means and refers to the planned unit development governed by this Declaration.

1.35 "Turnover Date" shall mean the date upon which control of a majority of the seats on the Board of Directors is transferred to the Members other than the Developer as described in Section 15 herein. "Turnover" shall mean and refer to the process by which the Developer transfers control of the Board of Directors to the Members other than the Developer and transfers physical possession or control of those records set forth in Section 720.307 of the Act.

1.36 "Turnover Meeting" shall mean the meeting of the Members on the Turnover Date at which the Turnover is completed. The term "Members other than the Developer" does not include Builders.

1.37 "Unit" means a finished portion of the Property for which a certificate of occupancy has been issued by the appropriate jurisdiction and which is intended for use and occupancy as a Single Family Residence. A Unit may be specifically referred to herein or any amendment or supplement hereto by reference to its type as elected by the Developer such as an "Attached Single Family Home", a "Single Family Home", or a "Townhouse Unit".

1.38 "Wetland" means and refers to any area within The Fields identified or designated as habitat for wetland species of plants and/or animals by the SFWMD or by Palm Beach County, Florida, or by the United States Army Corps of Engineers, or by any other agency of the State of Florida or the United States government, whether or not such area is included within the Storm Water Management System or is an isolated area that is not connected to the Storm Water Management System.

2. CDD; PROMOTIONAL TERMS.

2.1 CDD. The Developer retains the right to establish a community development district pursuant to Chapter 190, Florida Statutes (the "CDD"), which may have jurisdiction over The Fields. If established, the CDD will be governed by a Board of Supervisors elected by landowners pursuant to Chapter 190, Florida Statutes. The Board of Supervisors is independent from the Board of Directors of the Association. The CDD may impose and levy taxes or assessments, or both taxes and assessments on the Parcels. The taxes and assessments pay the construction, operation and maintenance costs of certain public facilities and services of the CDD and are set annually by the Board of Supervisors. These taxes and assessments are in addition Palm Beach County and other governmental taxes and assessments, and all other taxes and assessments provided for by law. The CDD has the power to issue any types of bonds permitted by Chapter 190, Florida Statutes and its uniform state created charter.

If the CDD is established, commencing on the date such CDD establishes jurisdiction over The Fields, each Parcel and the Common Area shall be burdened with perpetual, non-exclusive easements to the extent reasonably necessary for ingress, egress, and access to, and installation, maintenance, repair and replacement of, property and facilities of the CDD. Any damage resulting from the exercise of such easement shall promptly be repaired by, and at the expense of, the person exercising the easement.

The Association shall have the power, and is hereby authorized, to contract with and to cooperate with the CDD in order to determine that their respective responsibilities are discharged.

If the CDD is established, each contract for the sale of a Parcel shall include, immediately prior to the space reserved in the contract for the signature of the purchaser, the following disclosure statement in boldfaced type which is larger than the type in the remaining text of the contract:

THE FIELDS COMMUNITY DEVELOPMENT DISTRICT MAY IMPOSE AND LEVY TAXES OR ASSESSMENTS, OR BOTH TAXES AND ASSESSMENTS, ON THIS PROPERTY. THESE TAXES AND ASSESSMENTS PAY THE CONSTRUCTION, OPERATION, AND MAINTENANCE COSTS OF CERTAIN PUBLIC FACILITIES AND SERVICES OF THE DISTRICT AND ARE SET ANNUALLY BY THE GOVERNING BOARD OF THE DISTRICT. THESE TAXES AND ASSESSMENTS ARE IN ADDITION TO COUNTY AND OTHER GOVERNMENTAL TAXES AND ASSESSMENTS AND ALL OTHER TAXES AND ASSESSMENTS PROVIDED FOR BY LAW.

2.2 "DiVosta", "The Fields" or Logo. No person shall use the terms "DiVosta", "The Fields" or "Pulte", any derivative thereof or any "DiVosta", "The Fields" or "Pulte" logos in any printed or promotional material without the prior written consent of the Developer. However, Members, realtors and other persons may use the term "The Fields" in printed or promotional matter where such term is used solely to specify that a particular Parcel is located within The Fields. The Association shall be entitled to use the term "The Fields" in its name.

3. ASSOCIATION: MEMBERSHIP: VOTING RIGHTS. The administration, management and ownership of the Common Area shall be by the Association, which shall perform its functions pursuant to the following:

3.1 Articles of Incorporation. A copy of the Articles of Incorporation is attached as Exhibit "B".

3.2 Bylaws. A copy of the Bylaws is attached as Exhibit "C".

3.3 Delegation of Management. The Association may contract for the management and maintenance of The Fields and authorize a management agent to assist the Association in carrying out its powers and duties by performing such functions as the submission of proposals, collection of Assessments, preparation of records, enforcement of rules and maintenance, repair and replacement of the Common Area, with funds made available by the Association for such purposes. The Association and its officers shall, however, retain at all times the powers and duties provided in the Governing Documents.

3.4 Membership. Every person or entity who is an Owner shall be a Member, except that if a Parcel is subject to an agreement for deed, the purchaser in possession shall be considered the Owner for purposes of determining voting and use rights.

3.4.1 Class "A" Membership. Class "A" Members shall be all those Owners as defined in Section 1, with the exception of the Class "B" Member. Class "A" Membership shall become effective upon the last to occur of the following:

(1) Recording a deed or other instrument evidencing legal title to the Parcel in the Public Records of Palm Beach County, Florida.

(2) Delivery to the Association of a copy of the recorded deed or other instrument evidencing title.

(3) Delivery to the Association, if required, of a written designation of the Primary Occupants.

The failure to comply with the prerequisites set forth in (2)-(3) above shall not release the Owner from the obligation to comply with the Governing Documents, but shall otherwise preclude such Owner from obtaining the benefits of membership, including, without limitation, the right to receive notices and the right to vote on Association matters.

3.5 Class "B" Membership. The Class "B" Member shall be the Developer or any of its express successors or assigns.

Membership shall be appurtenant to, run with, and shall not be separated from the real property interest upon which Membership is based.

3.6 Voting Interests. In accordance with Section 720.301(13) of the Act, the term "Voting Interest" means the voting rights distributed to the Members pursuant to the Governing Documents. The Class "A" Members of the Association are entitled to one (1) vote for each Parcel they own. The total number of Class "A" votes shall not exceed the total number of Parcels subject to this Declaration. The vote of a Parcel is not divisible. If a Parcel is owned by one (1) natural person, his right to vote shall be established by the record title. If a Parcel is owned jointly by two (2) or more natural persons who are not acting as trustees, that Parcel's vote may be cast by any one (1) of the record Owners. If two (2) or more Owners of a Parcel do not agree among themselves how their one (1) vote shall be cast, that vote shall not be counted for any purpose. If the Owner is a corporation, partnership, limited liability company, trust, trustee or other entity other than a natural person, the vote of that Parcel shall be cast by any officer, director, partner, manager, managing member or trustee, as the case may be.

The Class "B" Member shall be entitled to a number of votes equal to the total number of Parcels owned by the Class "A" Members plus one (1) vote; provided that subsequent to the Turnover Date, the Class "B" Member shall be entitled to one (1) vote for each Parcel it owns.

3.7 Approval or Disapproval of Matters. Whenever the decision or approval of the Owner of a Parcel is required upon any matter, whether or not the subject of an Association meeting, such decision or approval may be expressed by any person authorized to cast the vote of such Parcel at an Association meeting as stated in Section 3.5 above, unless the joinder of all Owners is specifically required.

3.8 Change of Membership. A change of membership shall be established as provided in Section 3.4 above; and the membership of the prior Owner shall thereby be automatically terminated.

3.9 Termination of Membership. The termination of membership in the Association does not relieve or release any former Member from liability or obligation incurred under or in any way connected with the Association during the period of his membership, nor does it impair any rights or remedies which

the Association may have against any former Owner or Member arising out of or in any way connected with such ownership and membership and the covenants and obligations incident thereto.

3.10 Association As Owner of Parcels. The Association has the power to purchase Parcels and Units, and to acquire and hold, lease, mortgage, and convey them, by act of a majority of the Board of Directors.

3.11 Membership Roster. The Association shall maintain a current roster of names and mailing addresses of Owners and Primary Occupants. A copy of the up to date roster shall be available to any Owner upon request, subject to the exclusion of information that is protected from disclosure pursuant to the Act.

3.12 Limitation on Liability. Notwithstanding the duty of the Association to maintain and repair the Common Area, the Association shall not be liable to Owners for property damage other than the cost of maintenance and repair, caused by any latent condition of the property to be maintained and repaired by the Association, or caused by the elements or Owners or other persons.

3.13 Board of Directors. Except as otherwise provided by law or by the Governing Documents, the Association shall act through its Board of Directors and its officers, and no vote of the Members shall be required. The Officers and Directors of the Association have a fiduciary relationship to the Members. An Owner does not have the authority to act for the Association by virtue of being an Owner.

3.14 Powers and Duties. The powers and duties of the Association include those set forth in the Governing Documents.

3.15 Petition for Receivership. In the event of dissolution of the Association other than incident to a merger, consolidation or termination of the Declaration, any Owner may petition the Circuit Court in and for Palm Beach County, Florida for the appointment of a receiver to manage the affairs of the dissolved Association and the Common Areas in place and instead of the Association and to make such provisions as may be necessary for the continued management of the affairs of the dissolved Association and its properties.

4. COVENANT FOR ANNUAL AND SPECIAL ASSESSMENTS AND CHARGES.

4.1 Creation of Lien and Personal Obligation for Assessments and Charges. Subject to the limitations on assessment liability set forth elsewhere in this Declaration, the Developer, for each Parcel within The Fields, hereby covenants, and each subsequent Owner of any Parcel (including any purchaser at a judicial sale), by acceptance of a deed therefor, whether or not it shall be so expressed in such deed, is deemed to covenant and agree to pay to the Association:

4.1.1 the Parcel's pro rata share of annual Assessments based on the annual budget adopted by the Association (other than Neighborhood Assessments, if any, which shall be shared solely by the Owners in a particular Neighborhood);

4.1.2 the Parcel's pro rata share of special Assessments for Association expenditures not provided for by annual Assessments (other than special Neighborhood Assessments, which shall be shared solely by the Owners in a particular Neighborhood);

4.1.3 Neighborhood Assessments, if any;

4.1.4 any charges against less than all of the Parcels specifically authorized in this Declaration or the Bylaws;

4.1.5 initial capital contributions, as authorized pursuant to Section 4.9 below and as determined by the Developer, which may be referred to as "initial capital contributions", "working capital" or "capital contributions" in a purchase and sale agreement or other agreement between the Developer and the purchaser of a Parcel or between a Builder and the purchaser of a Parcel. Initial capital contributions are not Assessments;

4.1.6 resale capital assessments, as authorized pursuant to Section 4.10 below ("Resale Capital Assessments"); and

4.1.7 Assessments for the costs of the Association maintaining, repairing and replacing lawns and landscaping (including irrigation equipment), as set forth in Section 7.1 below ("Landscaping Assessments"). Landscaping Assessments shall be considered Assessments, except that Landscaping Assessments may vary by amount based upon the size of Parcels and will be shared solely by the Owners of Parcels of the same size.

Assessments and charges shall be established and collected as provided herein and in the Bylaws. The Assessments and charges, together with interest, costs, and reasonable attorney's fees shall bind such property in the hands of the Owner, his heirs, devisees, personal representatives, successors and assigns. In any conveyance, voluntary or otherwise, the transferee shall be jointly and severally liable with the transferor for all unpaid Assessments and charges coming due prior to the time of such conveyance, without prejudice to the rights of the transferee to recover from the transferor the amounts paid by the transferee. Except as provided elsewhere in this Declaration as to the Developer, Builders and first mortgagees (or their successors or assignees as a subsequent holder of the first mortgage), no Owner may be excused from the payment of Assessments unless all Owners are similarly excused.

4.2 Share of Assessments. Except as otherwise provided as to the Developer, Builders and first mortgagees (or their successors or assignees as a subsequent holder of the first mortgage) or as otherwise provided pursuant to this Declaration, each Parcel (and the Owner thereof) which has been submitted to the terms of this Declaration and which contains a Unit for which a final certificate of occupancy has been issued, shall be liable for its pro rata share of all Assessments. A Parcel which has been submitted to the terms of this Declaration containing land or improvements for which a final certificate of occupancy has not been issued, shall pay Assessments equal to five (5) percent (5%) of the Assessments which are payable by Parcels containing a Unit for which a final certificate of occupancy has been issued. All Common Area, and any property dedicated to and accepted by any governmental authority, taxing district, SFWMD, the CDD or public or private utility shall be exempt from payment of Assessments and charges.

4.3 Developer Subsidy. Notwithstanding anything to the contrary contained in this Declaration, at any time prior to the Turnover Date the Developer may elect, for each fiscal year, to: (a) pay Assessments on its Parcels that are subject to this Declaration as set forth in Section 4.2 hereof; or (b) not pay Assessments on its Parcels that are subject to this Declaration and in lieu thereof, to pay the difference between (i) the Association's actual operating expenses incurred (either paid or payable), but not any capital improvement costs, reserves, and special Assessments; and (ii) the amount of revenues earned (either received or receivable) from all sources (including, without limitation, Assessments, interest, late charges, fines, charges and other income sources and any surplus carried forward from the preceding year(s)). The option described in (b) above shall be referred to herein as the "Developer Subsidy". Any amounts paid by the Developer that exceed the Developer Subsidy obligation are referred to herein as "surplus" and shall be considered a loan from the Developer to the Association. Any surplus

may either be paid to the Developer after the conclusion of the fiscal year upon demand or carried forward to the next fiscal year. Any surplus remaining at the Turnover Date shall be paid to the Developer upon demand.

The Developer's election to choose the Developer Subsidy option may be evidenced by a notation in the Association's budget for the subsequent fiscal year or otherwise. If the Developer fails to make an election prior to the beginning of any fiscal year, it shall be deemed to have elected the option chosen in the prior fiscal year unless it subsequently notifies the Association in writing that it wishes to use the alternate option with respect to its Parcels. The Developer's obligations hereunder may be satisfied in the form of a cash subsidy or by "in kind" contributions of services or materials or a combination of a cash subsidy and "in kind" contributions. The Developer shall not be obligated to fund the Developer Subsidy until needed by the Association to fund cash expenditures by the Association.

The Developer may (but is not obligated to) loan, advance or otherwise make payments, "in kind" contributions of services or materials (or a combination thereof) to the Association to assist the Association in meeting its financial obligations, in addition to the Developer's obligation to either pay Assessments (to the extent required pursuant to Section 4.2 above) or fund the Developer Subsidy. Notwithstanding anything to the contrary contained in this Declaration, if, prior to the Turnover Date, the Developer loans, advances or otherwise makes payments, "in kind" contributions of services or materials (or a combination thereof) in excess of its Assessment or Developer Subsidy obligations, any such excess sums shall be repaid to the Developer.

After the Turnover Date, the Developer shall pay Assessments on its Parcels that are subject to this Declaration, but the amount to be paid for a particular Parcel shall be determined by whether the Parcel contains a Unit which has been issued a final certificate of occupancy as of when the particular Assessment becomes due (i.e., as of the commencement of the fiscal year if the Assessment is billed annually, or as of the commencement of the quarter if the Assessment is billed quarterly). As set forth in Section 4.2 above, a Parcel which has been submitted to the terms of this Declaration containing land or improvements for which a final certificate of occupancy has not been issued, shall pay Assessments equal to five (5) percent (5%) of the Assessments which are payable by Parcels containing a Unit for which a final certificate of occupancy has been issued.

4.4 Establishment of Liens. Any and all Assessments and charges levied by the Association or collected on behalf of in accordance with the provisions of the Governing Documents, together with interest at the highest rate allowed by law, late fees, and costs of collection (including, but not limited to reasonable attorney's fees) are hereby declared to be a charge and continuing lien upon the Parcel against which such Assessment(s) or charge(s) are made, and shall also be the personal obligation of the Owner of such Parcel. This lien is superior to any homestead rights the Owner may acquire. No Owner may exempt himself from personal liability for Assessments and charges, or release his Parcel from the liens and charges hereof, by waiver of the use and enjoyment of the Common Area, or by abandonment of his Parcel. The continuing lien may be perfected by the Association recording a Claim of Lien in the Public Records of Palm Beach County, Florida, setting forth the description of the Parcel, the name of the Owner, the name and address of the Association and the amount and due date of each unpaid Assessment and charge as of the date the Claim of Lien is recorded. The Claim of Lien may be executed by either an officer of the Association or its legal counsel. The effectiveness of the Claim of Lien shall relate back to the date this Declaration was recorded in the Public Records of Palm Beach County, Florida. However, with respect to first mortgages of record, the Association's lien is effective from and after recording of a Claim of Lien in the Public Records of Palm Beach County, Florida. A Claim of Lien shall secure payment of all Assessments and charges due at the time of recording (including interest, late fees, costs and attorney's fees as provided above), as well as all Assessments, interest, late fees, costs and attorney's fees coming due subsequently, until the Claim of Lien is satisfied or a final judgment of foreclosure

obtained. Upon full payment of all sums secured by that Claim of Lien, the party making payment is entitled to a Satisfaction of Lien.

4.5 Priority of Liens. The foregoing notwithstanding, the Association's lien for unpaid Assessments and charges shall be subordinate and inferior to the lien of all municipal, county, state and federal taxes, assessments and other levies which by law would be superior thereto. The Association's lien shall be subordinate and inferior to: all taxes, and other levies which by law would be superior thereto; and the lien of any recorded first mortgage, unless the Association's Claim of Lien was recorded prior to the first mortgage, but shall be superior to, and take priority over any other mortgage or lien regardless of when recorded. Any Lease of a Unit shall be subordinate and inferior to any Claim of Lien of the Association, regardless of when the Lease was executed. A mortgagee in possession, a receiver, a purchaser at a foreclosure sale, or a mortgagee that has acquired title by deed in lieu of foreclosure, and all persons claiming by, through or under such purchaser or mortgagee shall hold title subject to the liability and lien of any Assessment and charges coming due after foreclosure or conveyance in lieu of foreclosure. When a first mortgagee or its successor or assignee as a subsequent holder of the first mortgage obtains title to a Parcel as a result of a foreclosure of its first mortgage in which it sues the Owner and initially joins the Association in the mortgage foreclosure action, or obtains title to a Parcel as a result of a deed in lieu of foreclosure, such first mortgagee or its successor or assignee as a subsequent holder of the first mortgage which acquires title shall be liable for unpaid Assessments and charges except as may be limited by the Act as it now exists and as it may be amended from time to time, plus interest, late fees, collection costs and attorneys' fees and costs incurred by the Association. Any Assessments and charges that such first mortgagee or its successor or assignee as a subsequent holder of the first mortgage which acquires title to a Parcel is not obligated to pay the Association pursuant to the Act shall be deemed to be Common Expenses collectible from Owners of all of the Parcels in The Fields, including such acquirer, its successors and assigns. However, if the Association's Claim of Lien was recorded prior to the first mortgage, the first mortgagee or its successor or assignee as a subsequent holder of the first mortgage which obtains title shall be liable for all unpaid Assessments and charges plus interest, late fees, collection costs and attorneys' fees.

4.6 Collection of Assessments and Charges. If any Owner fails to pay any Assessment or charge, or installment thereof, within ten (10) days after the due date, the Association shall have any or all of the following remedies, to the extent permitted by law, which remedies are cumulative and are not in lieu of, but are in addition to, all other remedies available to the Association:

4.6.1 To charge interest on such Assessment or charge, from the date it becomes due until paid at the highest rate allowed by law, as well as to impose a late fee not to exceed the greater of Twenty-Five Dollars ($25.00) or five percent (5%) of the amount of each Assessment installment that is paid past the due date. The late fee shall not be considered a fine as provided for in Section 11.3, and the procedural requirements for levying fines set forth therein shall not apply.

4.6.2 To deny Association approval of any proposed Lease of the Owner's Unit.

4.6.3 To file an action in equity to foreclose its lien. The lien may be foreclosed by an action in the name of the Association in the manner set forth in the Act.

4.6.4 To bring an action at law for a money judgment against the Owner without waiving its right to foreclose its lien.

4.6.5 To suspend use rights to the Common Area and other facilities if the Owner is more than ninety (90) days delinquent in paying any fee, fine or other monetary obligation due to the Association.

4.7 Certificate. Within fifteen (15) days after the date on which a request for an estoppel certificate is received from an Owner or mortgagee, or his or her designee, the Association shall provide a certificate signed by an officer or authorized agent of the Association stating all Assessments and other moneys owed to the Association by the Owner or mortgagee with respect to the Parcel. The Association may charge a fee for the preparation of such certificate, and the amount of such fee must be stated on the certificate. Any person other than an Owner who relies upon a certificate receives the benefits and protection thereof.

4.8 Neighborhood Assessments. In addition to the Assessments shared by all Owners and Parcels on a pro rata basis, the Board of Directors may annually levy Neighborhood Assessments covering estimated Neighborhood Expenses for a particular Neighborhood, if the Developer creates Neighborhood(s). The Owners and Parcels in a particular Neighborhood shall be obligated to pay Neighborhood Assessments pro rata based upon the number of Parcels in that Neighborhood. The Board of Directors shall also have the authority to levy special Neighborhood Assessments against the Owners and Parcels in a particular Neighborhood, in the manner set forth in Section 6.5 of the Bylaws.

4.9 Initial Capital Contributions. Upon the initial conveyance of title to a Parcel from the Developer or a Builder, a non-refundable contribution in an amount determined by the Developer shall be made by the purchaser of such Parcel to the working capital of the Association, to be used to pay the Association's Common Expenses. Notwithstanding anything to the contrary contained in this Declaration, the Developer, Builders and their subsidiaries, affiliates, successors and assigns, shall be exempt from payment of the contributions required by this Section.

4.10 Resale Capital Assessments. Unless otherwise prohibited by FNMA, VA, HUD, FHA, FHLMC, or other similar governmental or quasi-governmental agency, a Resale Capital Assessment shall be due and payable to the Association by the transferee upon the conveyance of title to a Parcel by an Owner subsequent to the initial conveyance of title to the Parcel from the Developer or a Builder. Prior to the Turnover Date, the Developer shall determine the amount of the Resale Capital Assessment. Subsequent to the Turnover Date, the Board of Directors shall determine the amount of the Resale Capital Assessment for a particular calendar year. The Board of Directors may increase the Resale Capital Assessment in subsequent calendar years, but the amount shall not increase by more than ten percent (10%) over the previous calendar year. The Resale Capital Assessment will be collected at closing and, upon payment, may be used to pay the Association's Common Expenses. Payment of the Resale Capital Assessment shall be the legal obligation of the transferee of the Parcel. For the purposes of this Section, the term "conveyance" shall mean the transfer of title to a Parcel by deed or other authorized means of conveyance, with or without valuable consideration, and shall also refer to a transfer of possession and beneficial ownership by means of an agreement for deed, transfer of an interest in a land trust or similar conveyance of a beneficial interest. With the exception of the Developer or a Builder, if the Owner is a corporation, limited liability company or other business entity, then the term "conveyance" shall include the sale, issuance or transfer of any voting capital stock or interest of the Owner or of any corporate entity which directly or indirectly controls the Owner which shall result in a change in the voting control of the Owner or the legal entity or persons who control the Owner. With the exception of the Developer or a Builder, if the Owner is a partnership, then the sale, issuance or transfer of a majority interest therein, or the transfer of a majority interest in or a change in the voting control of any partnership which directly or indirectly controls the Owner, or the transfer of any portion of any general partnership or managing partnership interest which shall result in a change of control over the Owner, shall be deemed a "conveyance" within the meaning of this Section. Notwithstanding the foregoing, the following conveyances shall be exempt from payment of the Resale Capital Assessment: (a) to any person who was a co-Owner immediately prior to such conveyance; (b) to the Owner's estate, surviving spouse or other heirs, resulting from the death of the Owner; (c) to a trustee or the Owner's current spouse, solely for bona fide estate planning or tax reasons; (d) to an Institutional Mortgagee or the Association pursuant to a

Final Judgment of Foreclosure or deed in lieu of foreclosure; and (e) to the Developer, a Builder or their subsidiaries, affiliates, successors and assigns. Provided, however that upon a conveyance that occurs following the exempt transfers described in (a) through (e) above, the Resale Capital Assessment shall be due and payable. Notwithstanding anything to the contrary contained in this Declaration, in no event shall the Developer, a Builder or their subsidiaries, affiliates, successors and assigns be obligated to pay the Resale Capital Assessment.

4.11 Enforcement Against Tenants. Subject to the procedures and limitations set forth in Section 720.3085(8) of the Act, if a Parcel is occupied by a Tenant and the Owner is delinquent in paying any monetary obligation due to the Association, the Association may make a written demand that the Tenant pay the subsequent rental payments and continue to make such payments until all monetary obligations of the Owner related to the Parcel have been paid in full to the Association. The Tenant must pay the monetary obligations to the Association until the Association releases the Tenant or the Tenant discontinues tenancy in the Parcel. The Association may evict the Tenant if the Tenant fails to make a required payment to the Association.

In the event that Section 720.3085(8) is removed from the Act, the remainder of this Section shall be applicable to the Association's ability to collect rent from a Tenant. If an Owner has leased his Parcel and the Owner becomes delinquent in paying any monetary obligation due to the Association, the Association may make a written demand that the Tenant pay to the Association the subsequent rental payments and continue to make such payments until all monetary obligations of the Owner related to the Parcel have been paid in full to the Association. The Tenant must pay the monetary obligations to the Association until the Association releases the Tenant or the Tenant discontinues tenancy in the Parcel. If the Tenant paid rent to the Owner for a given rental period before receiving the demand from the Association and provides written evidence to the Association of having paid the rent within fourteen (14) days after receiving the demand, the Tenant shall begin making rental payments to the Association for the following rental period and shall continue making rental payments to the Association to be credited against the monetary obligations of the Owner until the Association releases the Tenant or the Tenant discontinues tenancy in the Parcel. The liability of the Tenant may not exceed the amount due from the Tenant to the Owner. The Owner shall provide the Tenant a credit against rents due to the Owner in the amount of moneys paid to the Association. The Association may evict the Tenant if the Tenant fails to make a required payment to the Association. However, the Association shall not be considered a landlord under Chapter 83, Florida Statutes. The Tenant shall not, by virtue of payment of monetary obligations to the Association, have any of the rights of an Owner. The Board shall have the authority as a condition of approving a Lease to require that the Tenant and the Owner enter into a Lease addendum that provides that all Lease payments shall be paid to the Association during such time as the Owner is delinquent in paying any monetary obligation owed to the Association. Alternatively, the Association may require that such language be included in the Lease.

5. ARCHITECTURAL AND AESTHETIC CONTROL.

5.1 Necessity of Architectural Review and Approval. Except for the Developer and Builders, no Owner shall make or permit the making of any alterations or additions to his Parcel (including landscaping), or in any manner change the exterior appearance of any portion of the Unit, without first obtaining the written approval of the Architectural Reviewer, which approval may be denied if the Architectural Reviewer determines that the proposed modifications or alterations would adversely affect, or in any manner be detrimental to, The Fields, in part or in whole. Any glass, screen, curtain, blind, shutter, awning, or other modifications, additions or installations which may be installed where visible from outside the Unit, are subject to regulation by the Architectural Reviewer. The installation of hurricane shutters shall be subject to regulation by the Architectural Reviewer. No review or approval by the Architectural Reviewer shall imply or be deemed to constitute an opinion by the Architectural

Reviewer, nor impose upon the Architectural Reviewer, the Association, the Board of Directors, the Developer, Builders, nor any other party, any liability for the design or construction of building elements, including, but not limited to, structural integrity, design, quality of materials, and compliance with building code or life and safety requirements. The scope of any such review and approval by the Architectural Reviewer is limited solely to whether the respective plans or work meet certain requirements, standards, and guidelines relating to aesthetics and the harmony and compatibility of proposed improvements in The Fields.

5.2 Architectural Review. The architectural review and control functions of the Association shall be administered and performed by the Architectural Reviewer. Prior to the Turnover Date, the Developer shall be the Architectural Reviewer and shall have the exclusive right to exercise architectural review under this Section. The Developer shall have the authority to process applications in its sole discretion and procedures and in accordance with its building plans, specifications, plan of development, aesthetic requirements and any Architectural Review Guidelines. Prior to the Turnover Date, the Developer may designate a third party with authority to process and approve applications as required in this Article. Following the Turnover Date, the Association shall be the Architectural Reviewer, whether through the Board of Directors or an Architectural Review Committee. The Architectural Review Guidelines shall in no event apply to the Developer and Builders, whether before or after the Turnover Date.

5.3 Powers and Duties of Architectural Reviewer. When the Association is acting as the Architectural Reviewer, the Architectural Reviewer shall have the following powers and duties:

5.3.1 To enact modifications and/or amendments to the Architectural Review Guidelines. Any modification or amendment to the Architectural Review Guidelines shall be consistent with the provisions of this Declaration. As long as the Developer owns at least one (1) Parcel or other property in The Fields, the Architectural Reviewer shall not alter the Architectural Review Guidelines without the Developer's prior written consent, which consent may be denied in the Developer's discretion. Notice of any modification or amendment to the Architectural Review Guidelines, including a verbatim copy of such change or modification, shall be posted on a website accessible by Members or otherwise delivered to each Member; provided that the posting or delivery of a copy of the modification or amendment to the Architectural Review Guidelines shall not constitute a condition precedent to the effectiveness or validity of such change or modification.

5.3.2 To require submission of one (1) complete set of all plans and specifications for any improvement or structure of any kind, including without limitation, any building, fence, wall, sign, site paving, grading, pool, parking and building additions, alteration, screen enclosure, sewer, drain, disposal system, decorative building, landscaping, landscape device or object or other improvement, the construction of placement of which is proposed upon any Parcel in The Fields, together with a copy of any required governmental permits. The Architectural Reviewer may also require submission of samples of building materials and colors proposed for use on any Parcel and may require such additional information as reasonably may be necessary for the Architectural Reviewer to completely evaluate the proposed structure or improvement in accordance with this Declaration and the Architectural Review Guidelines. Upon request by the Architectural Reviewer, the proposed contractor(s) shall supply a copy of all required business licenses and evidence of insurance with such coverages and amounts as the Architectural Reviewer may reasonably require. Reviews shall be coordinated with required governmental approvals. The Architectural Reviewer shall have sixty (60) days to respond once a complete set of plans and specifications have been submitted. Failure to respond within said sixty (60) days shall be deemed an approval.

5.3.3 To approve or disapprove any improvement or structure of any kind, including without limitation, any building, fence, wall, sign, site paving, grading, pools, parking and building additions, alterations, screen enclosure, sewer, drain, disposal system, decorative building landscaping, landscape device or object, or other improvement or change or modification thereto, the construction, erection, performance or placement of which is proposed upon any Parcel in The Fields and to approve or disapprove any exterior additions, changes, modifications or alterations (including, but not limited to, changes in exterior colors, finishes and materials) therein or thereon. All decisions of the Architectural Reviewer shall be in writing and may, but need not be made by a certificate in recordable form.

5.3.4 To approve or disapprove any change, modification or alteration to any improvement or structure as hereinabove described, and the plans and specifications if any upon which such change modification or alteration is based, prior to commencement of construction of such change, modification or alteration. If any improvement or structure as aforesaid shall be changed, modified or altered without prior approval of the Architectural Reviewer of such change, modification or alteration, and the plans and specifications therefore, if any, then the Owner shall upon demand, cause the improvement or structure to be restored to comply with the plans and specifications, originally approved by the Architectural Reviewer and shall bear all costs and expenses of such restoration, including costs and reasonable attorney's fees of the Architectural Reviewer or the Association. The Architectural Reviewer shall be specifically empowered to grant variances from the covenants, conditions and restrictions as contained herein and as are deemed reasonable, required or necessary to meet the needs of the particular building site. The granting of a variance shall not prevent the Architectural Reviewer from denying a variance in other circumstances.

5.3.5 To adopt a schedule of reasonable fees and security deposits for processing requests for approval or proposed improvements. Such fees and security deposit(s), if any, shall be payable to the Association by check or money order at the time that plans and specifications are submitted to the Architectural Reviewer and subsequently if the Architectural Reviewer requires. In the event such fees and security deposit(s), as well as any other costs or expenses of the Architectural Reviewer pursuant to any other provisions of this Article are not paid by the Owner and the contractor who will perform the work, such fees, security deposit(s), costs and expenses shall become a lien on the Owner's Parcel. The Architectural Reviewer may, as a condition to issuing approval, require the Owner to pay the Association a security deposit in the amount of up to Five Thousand Dollars ($5,000.00) and require the contractor who will perform the work to pay the Association an additional security deposit in an amount determined by the Architectural Reviewer. The security deposit(s) shall cover damage to the Common Area caused by or related to any work performed or ordered to be performed by the Owner, costs, attorney's and professional fees the Association incurs as a result of violations of the Governing Documents or defective work. Upon satisfactory completion of the work in accordance with the approved plans and specifications, the Association shall return the security deposit(s) to the Owner and the contractor, as applicable, less any damage to the Common Area and costs, attorneys' and professional fees the Association has incurred. In the event the amount of damage, costs, attorneys' and professional fees exceeds the sum of Five Thousand Dollars ($5,000.00) plus any additional security deposits the Association requires the contractor to pay, the Association may collect such amount in the same manner as unpaid Assessments.

5.3.6 To monitor construction to verify compliance with the provisions hereof and any approvals and conditions of the Architectural Reviewer.

5.4 Architectural Control by Developer. Prior to the Turnover Date, the Developer shall act as the Architectural Reviewer. The Developer may process applications from Owners seeking approval for any alterations or additions to a Parcel, or in any manner to change the exterior appearance of any

portion of a Unit, in accordance with its sole discretion and procedures and its building plans, specifications, plan of development and aesthetic requirements. In the event that an Owner makes improvements, additions or modifications without the Developer's prior approval, the Developer may enforce the terms of the Governing Documents in the same manner as granted to the Association, or may delegate enforcement of the Governing Documents to the Association.

5.5 Garages. No garages shall be converted to residential use or use other than as originally designed with the exception of conversion of garages by the Developer and Builders for use as sales offices and other purposes. Garages shall not be used as a "woodshop" or other uses that generate unusual amounts of noise and dust unless the garage door is kept closed, provided that in no case shall such use create a nuisance.

5.6 Encroachments Into Common Areas Prohibited. Owners may not install any landscaping, improvement or structure of any kind, including, without limitation, a pool, wall, fence or screen, which encroaches into or alters the slope of any Common Area, including any drainage canal, wetlands, preservation area, lakes, ponds or similar stormwater management area.

5.7 Developer and Builder Construction. The restrictions set forth in this Article shall not apply to the Developer and Builders. The Developer reserves the right to alter the plan of development and architectural style of The Fields, Parcels and Units as it deems desirable in its sole discretion. The ability of a Builder to vary the architectural style of Parcels and Units shall be subject to a contractual agreement between a Builder and the Developer.

5.8 Prohibitions on Grading Modifications and Impairment of Drainage. The Association and Owners are prohibited from modifying grading on any property in The Fields that is detrimental to properties that are adjacent to The Fields. The Association and Owners are also prohibited from installing any landscaping, improvements or structures or doing any work in The Fields that impairs the Stormwater Management System.

5.9 Other Approvals Required. Approvals granted by the Architectural Reviewer pursuant to this Declaration shall not avoid the need for any approvals set forth in the Neighborhood Documents. Each Owner is responsible for obtaining all necessary governmental approvals prior to commencement of any work. The Architectural Review Guidelines of the Association shall take priority over any conflicting architectural review guidelines adopted by a Neighborhood Association.

5.10 No Waiver of Future Approvals. Approval by the Architectural Reviewer pursuant to this Section shall not be deemed a waiver of any right to withhold approval with respect to any similar plans, specifications, samples or other materials.

6. PROPERTY RIGHTS: EASEMENTS.

6.1 Use of Common Area. Every Owner and his Tenants, Guests and invitees shall have a perpetual non-exclusive easement for ingress, egress and access in, to and over the sidewalks, walkways and private roads, if any, which may be contained within the Common Area for use in common with all other Owners, their Tenants, Guests and invitees. On or prior to the Turnover Date, the Developer shall convey the Common Area to the Association by Quit Claim Deed(s). The Association shall be obligated to accept such conveyance subject to the terms, conditions, and restrictions set forth herein and in such Quit Claim Deed(s), and without any requirement of membership approval. No title insurance, title opinion or survey shall be provided to the Association by the Developer. All costs and expenses of any conveyance of any property by the Developer to the Association shall be paid for by the Association. The Developer shall not be required to formally tender or deliver the Quit Claim Deed(s) or other

instrument(s) to the Association prior to recordation in the Public Records of Palm Beach County, Florida. Upon request, the Association shall convey back to the Developer or its designee(s), without any payment by the Developer or such designee(s), other than nominal consideration (i.e., "$10.00 and other good and valuable consideration"), and without any requirement of membership approval, any real property which has not been improved by a structure intended for recreational purposes, if originally conveyed to the Association for nominal consideration. Except as otherwise limited in the Governing Documents, the portions of the Common Area in addition to those used for walkways, private streets, sidewalks or driveways shall be for the common use and enjoyment of the Owners and each Owner shall have a permanent and perpetual easement for the use and enjoyment of such lands as in such manner as may be regulated by the Association. These easements shall be appurtenant to and shall pass with the title to every Unit subject to the following:

6.1.1 The right and duty of the Association to levy Assessments against each Parcel for the upkeep, maintenance, repair or betterment of the Common Area and improvements thereon.

6.1.2 The right of the Association to dedicate or transfer or grant an easement covering all or any part of the Common Area to any public agency, authority, or utility for such purposes and subject to such conditions as may be determined by the Board of Directors. No such easement shall materially interfere with the rights of the Owner to use the Common Area for the purposes intended.

6.1.3 The right of an Owner to the use and enjoyment of the Common Area and facilities thereon shall extend to the members of his Family who reside with him, and to his Tenants, Guests and invitees, except as otherwise provided in the Governing Documents.

THE ASSOCIATION SHALL ACCEPT "AS IS, WHERE IS" THE CONVEYANCE OF THE COMMON AREA WITHOUT ANY REPRESENTATION OR WARRANTY, EXPRESS OR IMPLIED, IN FACT OR BY LAW, WITH RESPECT THERETO, OR WITH RESPECT TO THE IMPROVEMENTS INCLUDING, BUT NOT LIMITED TO, REPRESENTATIONS OR WARRANTIES REGARDING THE CONDITION, CONSTRUCTION, ACCURACY, COMPLETENESS, DESIGN, ADEQUACY OF SIZE OR CAPACITY IN RELATION TO THE UTILIZATION, DATE OF COMPLETION OR THE FUTURE ECONOMIC PERFORMANCE OF OPERATIONS OF, OR THE MATERIALS OR FURNITURE WHICH HAS BEEN OR WILL BE USED IN SUCH PROPERTY. BY ACCEPTANCE OF AN INTEREST IN ANY SUCH PROPERTY OR THE DEED TO ANY PARCEL, THE ASSOCIATION AND ALL OWNERS RELEASE THE DEVELOPER AND BUILDERS FROM ANY CLAIMS AND WARRANT THAT NO CLAIM SHALL BE MADE BY THE ASSOCIATION OR ANY OWNER RELATING TO THE CONSTRUCTION, CONDITION, ADEQUACY FOR ANY PARTICULAR PURPOSE OR FOR THE NUMBER OF USERS, DESIGN, FITNESS, ECONOMIC PERFORMANCE OR COMPLETENESS OF SUCH PROPERTY OR REPAIRS OR FOR INCIDENTAL OR CONSEQUENTIAL DAMAGES ARISING THEREFROM.

THE DEVELOPER AND THE ASSOCIATION SHALL NOT BE OBLIGATED TO PROVIDE SUPERVISORY PERSONNEL, INCLUDING, BUT NOT LIMITED TO, LIFEGUARDS, FOR ANY RECREATION AREAS. ANY INDIVIDUAL USING A RECREATION AREA SHALL DO SO AT HIS OR HER OWN RISK AND HEREBY HOLDS THE DEVELOPER AND THE ASSOCIATION HARMLESS FROM AND AGAINST ANY CLAIM OR LOSS ARISING FROM SUCH USE.

THE DEVELOPER AND THE ASSOCIATION MAY, BUT SHALL NOT BE OBLIGATED TO MAINTAIN OR SUPPORT ACTIVITIES WITHIN THE FIELDS DESIGNED TO MAKE THE

FIELDS SAFER THAN IT MIGHT OTHERWISE BE. THE DEVELOPER AND THE ASSOCIATION DO NOT MAKE ANY REPRESENTATIONS OR WARRANTIES WHATSOEVER AS TO THE SECURITY OF THE FIELDS OR THE EFFECTIVENESS OF ANY SUCH ACTIVITIES. ALL OWNERS AND OCCUPANTS IN THE FIELDS AGREE TO SAVE AND HOLD THE DEVELOPER AND THE ASSOCIATION HARMLESS FROM ANY LOSS OR CLAIM ARISING FROM THE OCCURRENCE OF ANY CRIME OR OTHER ACT. THE ASSOCIATION AGREES TO SAVE AND HOLD THE DEVELOPER HARMLESS FOR ANY LOSS OF CLAIM ARISING FROM THE OCCURRENCE OF ANY CRIME OR OTHER ACT. NEITHER THE DEVELOPER NOR THE ASSOCIATION SHALL IN ANY WAY BE CONSIDERED INSURERS OR GUARANTORS OF SECURITY WITHIN THE FIELDS.

6.2 Easements. The Developer (during any period in which the Developer has any ownership interest in The Fields) shall have the right to grant such electric, telephone, gas, water, sewer, irrigation, drainage, canal, cable television, sidewalk, public pedestrian, road construction, lift station, maintenance and overhang, any easements contained or required on the plat for The Fields, any easements required by the Lake Worth Drainage Districts or other easements, and to relocate any existing easement in any portion of The Fields and to grant access easements and to relocate any existing access easements in any portion of The Fields as the Developer shall deem necessary or desirable, including, without limitation, for the following purposes: the proper construction of The Fields; operation and maintenance of The Fields, or any portion thereof; the general health or welfare of the Owners; to carry out any provisions of the Governing Documents; and to fulfill the Developer's obligations to any governmental authority, taxing district, the CDD, a public or private utility or SFWMD. Such easements or the relocation of existing easements may not prevent or unreasonably interfere with the use of the Parcels and Units. Each Parcel shall be subject to an easement in favor of all other portions of The Fields for the location of utilities and for surface water drainage, for lateral and subjacent support, and for the use, maintenance, repair, and replacement of public or private utility lines and other similar or related facilities serving other Parcels and portions of The Fields. In addition, if, by reason of original construction, shifting, settlement or movement, any Unit encroaches upon the Common Area or upon any other Parcel, then an easement shall exist to the extent of that encroachment as long as the encroachment exists. In the event that any structure is partially or totally destroyed, then rebuilt, then the Owners and the Association agree that encroachments on adjacent Parcels or on Common Area due to construction shall be permitted and that an easement for such encroachments and the maintenance of the structure shall exist, but such encroachments shall be to the extent permitted by the original construction, shifting, settlement or movement. The Association and its vendors, contractors and employees, are granted a blanket easement over the Common Area and Parcels for repair and maintenance and for carrying out the Association's responsibilities pursuant to this Declaration. Each Parcel shall be subject to an access easement in favor of the adjoining Owner(s) and their contractors and agents for purposes of bringing materials and construction equipment to the rear or side of the Parcel for construction of pools or other structures. The adjoining Owner shall restore the Parcel to its previous condition following completion of such construction. Following the Turnover Date, the Association shall have the authority to grant easements on the foregoing terms, subject to the Developer's prior written consent as long as the Developer owns a Parcel or any property located in The Fields.

6.3 Town House Easements.

6.3.1 Easements for Townhouse Unit Owners. The Developer hereby grants a perpetual easement to all Owners of Townhouse Units for driveway and vehicular access across driveways located on the Common Area where such Townhouse Units may be accessed. The Developer also grants a perpetual easement over the Common Area to all Owner of Townhouse Units for any air conditioning pads and air conditioning equipment located thereon and adjacent to the end Units of any

Townhouse Unit building. Any utility or service provided requiring access to such air conditioning pads or air conditioning equipment shall likewise have the right of ingress and egress over such portions of the Common Areas as may be needed to service, repair or replace such air conditioning equipment.

6.3.2 Utility Easements for Townhouse Units. The Developer hereby also grants a perpetual utility easement on the exterior walls of end Units of Townhouse Unit buildings, and under the Townhouse Units for the use and benefit of the Townhouse Unit Owners owning Units within such Townhouse Unit building. It is expressly understood that the construction of Townhouse Units shall occur over the underground easements. These easements are for ingress, egress, installation, replacement, repair and maintenance of utility meters and lines for electricity, air conditioning refrigerant, telephone, cable TV and other telecommunication services. It shall be expressly permissible for the Developer or the providing utility or service company to inspect, monitor, read meters and install and maintain facilities and equipment on the ends of Units of Townhouse Unit buildings and under Townhouse Units, and to insert and maintain wires and lines within conduits under such Townhouse Units; provided that such utility company restores any disturbed area substantially to the condition existing prior to such activity. Unless maintenance, repairs or replacement of underground utility lines are required, and such service cannot be accomplished from the exterior of the Townhouse Unit building by removing such lines from their respective conduits, then it shall be permissible for such utility or service provider to excavate such lines and to perform any necessary maintenance, repairs or replacements; provided that such company restores any disturbed area substantially to the condition existing prior to its activities. The Owner of the Townhouse Unit floor surface shall have complete surface rights unless such maintenance, repairs or replacements from the surface of such Townhouse Unit floor are necessary.

6.4 Partition: Separation of Interest. There shall be no judicial partition of the Common Area, except as expressly provided elsewhere herein, nor shall the Developer, or any Owner or any other person acquiring any interest in The Fields, or any part thereof, seek judicial partition thereof. Nothing herein shall be construed to prevent judicial partition of any Parcel and Unit owned on co-tenancy. The ownership of any Parcel and the ownership of the Unit constructed thereon may not be separated or separately conveyed; nor may any person who does not have an ownership interest in at least one (1) Parcel hold membership in the Association, except for the Developer.

6.5 Construction; Maintenance. The Developer and Builders (including their agents, designees, contractors, successors and assigns) shall have the right, in their sole discretion, to enter The Fields and take all other action necessary or convenient for the purpose of completing the construction of any improvements or Units. As long as the Developer and Builders are liable under the terms of any warranty in favor of an Owner, the Developer and Builders (including their agents, designees, contractors, and their successors and assigns) shall have an easement of access to The Fields and any Parcels and Units in order to make repairs, replacements and take all other action necessary or convenient for the purpose of fulfilling their obligations.

6.6 Additional Easements. The Fields (including the Parcels) shall be subject to and benefited by any and all easements which are set forth in the Governing Documents or any plat or other recorded instrument encumbering all or a portion of The Fields, including, without limitation, utility easements for the installation, maintenance and repair of utilities by any utility company and drainage easements. The Fields (including the Parcels) shall also be subject to a public service easement for police protection, fire protection, emergency services, postal services and meter reading. The Association shall have such easements across The Fields and all Parcels as are necessary to fulfill its obligations as set forth in the Governing Document.

6.7 Polling Place Requirement. Accommodation shall be made for future use of a portion of the Common Areas for purposes of an electoral polling place in the event such requirement is imposed by Palm Beach County or the CDD.

7. MAINTENANCE OF COMMON AREA, PARCELS AND UNITS.

7.1 Association Maintenance. Notwithstanding that the Developer may initially retain ownership of the Common Area, the Association shall, pursuant to this Declaration, be responsible for the management, maintenance, insurance and operation of the Common Area, including, without limitation, the Storm Management System, except for portions to be maintained by Owners. The Association shall be responsible for the maintenance, repair and replacement of the lawns and landscaping (including irrigation equipment) ("Landscaping Services") located on Parcels as originally installed by the Developer or a Builder (in the case of a Builder, only to the extent that the lawns and landscaping are substantially similar to those installed by the Developer). The Association shall be responsible for the maintenance, repair and replacement of perimeter walls, if any. All maintenance, repair and replacement which is the responsibility of the Association shall be a Common Expense, unless the Association undertakes maintenance, repair or replacement of a Parcel and Unit due to an Owner's failure to undertake the maintenance, repair or replacement.

7.2 Palm Beach County Tree/Root Provisions. Each Owner acknowledges that the Developer may install certain trees along the roads throughout the Fields (collectively "Street Trees"). Certain types of tree specimens' root structure can potentially cause damage to street infrastructure; including but not limited to asphalt, curb and gutter, and sidewalks as well as utilities within the road right-of-way. This damage can be mitigated somewhat through the use of root barriers that will be installed on trees within close proximity to the street system infrastructure. However, other subdivisions developed similarly have experienced damage to infrastructure caused by these root systems. The Association will monitor and maintain the integrity of both the trees and the road infrastructure in perpetuity and shall be responsible for any repairs required to the road system infrastructure. Palm Beach County shall have no responsibility for repairs to damages caused by the Street Trees or any other cause with regard to the Fields' road system. This section shall not be amended without the written consent of the Palm Beach County Engineer or the Board of County Commissioners of Palm Beach County.

The Association and Owners further acknowledge that certain types of tree specimens' root structure will grow and expand over time (collectively, "Root Growth"). Such Root Growth may expand, intrude under and potentially damage sidewalks, driveways, drainage structures and pipes, walking paths, bike paths, streets, gutters, curbs and paver bricks located on the Property. Such Root Growth, expansion and intrusion are natural and expected conditions and occurrences, and shall be maintained and repaired in accordance with this Declaration. The Association and each Owner further acknowledge and agree that Palm Beach County: (i) shall not have any responsibility to control, maintain or repair any such Root Growth or any of the damage caused by the roots, and (ii) shall not have any liability for losses or damages arising out of and/or resulting from such Root Growth, expansion or intrusion. this exculpation of Palm Beach County in this paragraph may not be amended without the prior written consent of the Palm Beach County Engineer or the Board of County Commissioners of Palm Beach County.

7.3 Owner Maintenance. Owners shall maintain, repair and replace their Parcels, Units and any other improvements, modifications and additions thereto in a safe, clean, orderly and attractive condition, except for those portions to be maintained, repaired and replaced by the Association. Whenever an Owner contracts for maintenance, repair, replacement, alteration, addition or improvement of any portion of the Parcel or Unit, whether with or without approval from the Architectural Reviewer, such Owner shall be deemed to have warranted to the Association and its Members that his contractor is properly licensed and fully insured and that the Owner will be financially responsible for any resulting

damage to persons or property not paid by the contractor's insurance. Owners shall keep the sidewalks located on their Parcels clean (including by pressure washing as necessary) and free from impediments to pedestrian traffic.

In addition, the Owners of Single Family Homes, Single Family Attached Homes and Townhouse Units shall have the following respective maintenance obligations:

7.3.1 Single Family Home Owner's Maintenance Responsibility. Each Owner of a detached Single Family Home shall maintain the exterior of his/her Single Family Home, including the walls and fences (where applicable), in good condition and repair and undertake the normal and routine painting of the exterior walls; provided, however, that no Owner of a detached Single Family Home shall repaint, refinish or otherwise modify the exterior surfaces of the Single Family Home without the prior written consent of the Architectural Reviewer. Each Owner of a detached Single Family home shall additionally maintain the roof of his/her Single Family Home in good condition and repair, keep the roof free from debris and replace the roof as and when necessary.

7.3.2 Townhouse Unit Owner's Maintenance Responsibility.

(1) Maintenance of the Exterior of the Townhouse Unit. Subject to the maintenance duties of the Association, each Townhouse Unit Owner shall maintain his Townhouse Unit, including all boundary walls and fences, in good condition and repair and in a like condition, appearance, and quality as originally constructed. Notwithstanding the foregoing, the Association shall be responsible for normal and routine pressure cleaning and (where applicable) painting of the boundary walls, Developer-installed fences, and "shared roofing" (defined below) of a Townhouse Unit. The Board of Directors shall determine the need for such cleaning and painting from time to time. All costs reasonably related to said cleaning and painting shall be borne by the Association as a Common Expense.

(2) Party Walls. The Units comprising each Townhouse Unit building are residential Townhouse Units with common walls, known as "party walls", between each Unit that adjoins another Unit. The center line of a party wall is the common boundary of the adjoining Unit. The cost of maintaining each side of a party wall shall be borne by the Owner using said side, except as otherwise provided herein. Each adjoining owner of a party wall, his/her heirs, successors, and assigns shall have the right to use same jointly with the other party to said wall as herein set forth. The term "use" shall and does include normal interior usage such as paneling, plastering, decoration, erection of tangent walls and shelving but prohibits any form of alteration which would cause an aperture, hole, conduit, break or other displacement of the original concrete forming said party wall. A mortgagee, a receiver, or a mortgagee that has acquired title by deed in lieu of foreclosure or other legal means, shall have the same rights as its mortgagor with respect to party walls.

(3) Party Fences. Those walls, structures, or fences, which may be constructed between two adjoining Townhouse Units and are to be shared by the Owners of said adjoining Townhouse Units are to be known as and are hereby declared to be "Party Fences". Party Fences shall be the joint maintenance obligation of the Owners of the Townhouse Units bordering the fences. Each Townhouse Unit Owner shall have the right to full use of said fence subject to the limitation that such use shall not infringe on the rights of the Owner of the adjacent Townhouse Unit or in any manner impair the value of said fence. Each Owner shall have the right and duty to maintain and to perform superficial repairs to that portion of a Party Fence which faces such Owner's Unit. The cost of said maintenance and superficial repairs shall be borne solely by said Owner. In the event of damage or destruction of the Party Fence from any cause whatsoever, other than negligence or willful misconduct of one of the adjacent Townhouse Unit Owners, the Owners of the adjacent Townhouse Units shall, at their joint expense, repair and rebuild said fence within 30 days, unless extended by the Board. In the event it

is necessary to repair or rebuild a Party Fence, the Owners shall agree on the cost of such repairs or rebuilding, and shall agree on the person or entity to perform such repairs, provided however, all such repairs must be performed by a qualified contractor. If the Owners cannot agree on the cost of such repairs or on the person or entity to perform such repairs, each Owner shall choose a member of the Board of Directors to act as their arbiter. The Board members so chosen shall agree upon and choose a third Board member to act as an additional arbiter. All of the said Board members shall thereafter choose the person or entity to perform the repairs and shall assess the costs of such repairs in equal shares to the Owners. Whenever any such fence or any part thereof shall be rebuilt, it shall be erected in the same manner and be of the same size and of the same or similar materials and of like quality and color and at the same location where it was initially constructed; provided that, if such maintenance, repair or construction is brought about solely by the neglect or the willful misconduct of one Townhouse Unit Owner, any expense incidental thereto shall be borne solely by such wrongdoer. If the Townhouse Unit Owner shall refuse to repair or reconstruct the fence within 30 days, unless extended by the Board, and/or to pay his share, all or part of such cost in the case of negligence or willful misconduct, the Association may have such fence repaired or reconstructed and shall be entitled to a lien on the Parcel of the Townhouse Unit Owner so failing to pay for the amount of such defaulting Owner's share of the repair or replacement. In the event repairs or reconstruction shall be necessary, all necessary entries on the adjacent Townhouse Unit Parcels shall not be deemed a trespass so long as the repairs and reconstruction shall be done in a workmanlike manner, and consent is hereby given to enter on the adjacent lots to effect necessary repairs and reconstruction.

(4) Shared Roofing. The entire roof of the Townhouse Unit building, any and all roof structure support, and any and all appurtenances to such structures, including without limitation, the roof covering, fascia, soffit, and roof drainage fixtures, shall be collectively referred to as "shared roofing". The shared roofing shall not be considered as Common Area. To the extent not inconsistent with the provisions of this Section, the general rules of law regarding party walls and liability for property damage due to negligence or willful acts or omissions shall apply thereto. All Owners who make use of the shared roofing shall share the cost of reasonable repair and maintenance of such shared roofing equally. If any portion of the shared roofing is destroyed or damaged by fire or other casualty, then to the extent that such damage is not covered by insurance and repaired out of the proceeds of insurance, any Owner who has use of the shared roofing may restore it. If other Owners also have use of the shared roofing, they shall contribute to the restoration cost in equal proportions. However, such contribution will not prejudice the right to call for a larger contribution from an Owner who may have a greater liability under any rule of law regarding liability for negligent or willful acts or omissions. The right of an Owner to contribution from any other Owner under this subparagraph shall be appurtenant to the land and shall pass to such Owner's successors-in-title. A mortgagee, a receiver, or a mortgagee that has acquired title by deed in lieu of foreclosure or other legal means, shall have the same rights as its mortgagor with respect to shared roofing.

(5) Damage. If a Townhouse Unit is damaged solely by the negligent or willful misconduct of a Townhouse Unit Owner, any expense to repair or reconstruct the Unit shall be borne solely by such wrongdoer. If a Townhouse Unit is damaged through an act of nature or suffers some other casualty loss, the affected Owner shall promptly have his Unit repaired and rebuilt substantially in accordance with the original architectural plans and specifications of the Townhouse Unit building, subject to the consent of the Architectural Reviewer as set forth herein. If the Owner refuses or fails to pay the cost of such repair or reconstruction, or if insurance proceeds are insufficient to repair or rebuild the affected Unit(s) the Association shall have the right to specially assess all Members of the Association for the costs of such repair and re-construction, and the Association shall thereafter have the right to complete such repair and reconstruction substantially in accordance with the original plans and specifications of the affected building. If the Members are specially assessed in accordance herewith, the Association shall have the right to lien the repaired or reconstructed Townhouse Unit for a reimbursement

of all expenditures of the Association in connection with the repair or reconstruction, including without limitation all repair or reconstruction costs, interest, costs, professional fees. Upon payment and satisfaction of such a lien, the reimbursement of such costs and fees shall be added to the funds of the Association. The assessment and collection of such assessment authorized pursuant to this paragraph shall be made in accordance with Section 7.4 below.

(6) Modifications. No Townhouse Unit Owner shall paint, refurbish or modify the exterior surfaces of his Unit without the prior written consent of the Architectural Reviewer. While normal cleaning, repainting and refinishing of the exterior surfaces shall be done uniformly at the same time for all Units by the Association and as a Common Expense, a Townhouse Unit Owner may perform such cleaning, repainting or refinishing at his own expense with the prior written consent of the Architectural Reviewer.

(7) Failure to Maintain. In the event an Owner shall fail to maintain correct drainage and/or to maintain the premises and the improvements thereon as provided herein, the Association, after notice to the Owner, shall have the right to enter upon any Parcel to correct drainage and to repair, maintain and restore the exterior of the Unit and any other improvements erected thereon. All costs related to such correction, repair or restoration shall become a special Assessment against such Unit. Except when entry is required due to an emergency situation, the Association shall afford the Owner reasonable notice and an opportunity to cure the failure to maintain prior to entry.

(8) Homeowner's Insurance. Each Owner of a Townhouse Unit shall maintain physical damage insurance for his or her Townhouse Unit in an amount equal to the replacement value of the Unit. The Association may require that each such Owner provide proof of insurance. Should any such Owner fail to provide proof of insurance upon request, the Association may purchase the required insurance, and the costs of such insurance may be levied as a special Assessment against such Unit. The Association shall maintain physical damage insurance for the Townhouse Units in an amount equal to the replacement value of such Unit. The costs of such insurance will be a Common Expense.

7.4 Alterations and Additions to Common Area. Material alterations or substantial additions to the Common Area may be undertaken and funds necessary levied as special Assessments by the Association only upon approval by a majority of the Board of Directors. No portion of the private roads in The Fields shall be altered without the prior written approval of the Palm Beach County Engineer or his authorized designee. The Developer's consent shall also be required until the Developer conveys the last Parcel that may be submitted to the terms of this Declaration.

7.5 Enforcement of Maintenance. In the event that an Owner fails or refuses to comply with these provisions, after fourteen (14) days' notice and demand from the Association and the Owner's failure to comply, the Association shall have the authority (but not the obligation) to take whatever action is reasonably necessary in its judgment to bring the Parcel and Unit into conformity and the expenses of doing so shall be an obligation of the Owner collectable as a special Assessment against that Parcel. The Association is granted an easement upon the Parcel and its improvements for these purposes. In the alternative, the Association may institute legal proceedings to compel the Owner to observe his obligations set forth in the Governing Documents.

7.6 Negligence: Damage Caused by Condition in Unit. The Owner of each Unit shall be liable for the expenses of any maintenance, repair or replacement of Common Area, other Units, or personal property made necessary by his act or negligence, or by that of any member of his Family or his Guests, employees, agents, or Tenants. Each Owner has a duty to maintain his Unit and personal property therein, in such a manner as to prevent foreseeable and reasonably preventable damage to other Units, the Common Area or the property of other Owners and residents. If any condition, defect or malfunction,

resulting from the Owner's failure to perform this duty causes damage to other Units, the Common Area or property within other Units, the Owner of the offending Unit shall be liable to the person or entity responsible for repairing the damaged property for all costs of repair or replacement not paid by insurance. The Association may, but is not obligated to repair the damage and hold the responsible party liable for all costs, secured by a lien against the applicable Parcel, which lien may be foreclosed in the same manner as the Association's Claim of Lien.

7.7 Developer's Lien. In the event the Association fails to maintain, replace or repair as herein provided, upon thirty (30) days' notice to the Association, the Developer or its designee shall have the right, without being obligated to do so, to enter upon The Fields and cause said maintenance, replacement, or repair to be made, and in such event, the Developer shall have a lien upon The Fields, including all Parcels therein, for the costs thereof, including, without limitation, interest, court costs and reasonable attorneys' fees and appellate attorneys' fees incurred by the Developer in collecting the sums expended by it. The aforesaid lien may be foreclosed in the same manner as the Association's Claim of Lien. In the event of an emergency situation threatening the health and welfare of the residents, the Developer may immediately enter upon The Fields and cause such maintenance replacements or repairs to be made forthwith and without the requirement of any prior notice thereof, and the Developer shall have an enforceable lien upon The Fields as described above.

7.8 Stormwater Management System. The permit issued by SFWMD as of this date is attached hereto as Exhibit "D" ("Permit"). Copies of the Permit and any future SFWMD actions shall be maintained by the Association and/or its registered agent for the Association's benefit. The Association shall maintain and operate the Stormwater Management System within The Fields (except for such portions that are within each Owner's maintenance responsibility) in accordance with the permit(s) and regulations of SFWMD and/or its successor, and shall allocate sufficient funds in its annual budget for such obligations. To the extent required by the Permit, it shall be the Association's responsibility to successfully meet and complete all Permit conditions associated with any Wetland mitigation, success criteria, maintenance and monitoring. The Association shall allocate sufficient funds in its annual budget for such mitigation, maintenance and monitoring of Wetland mitigation area(s) each year until SFWMD determines that the area(s) is successful in accordance with the Permit. Operation, maintenance and re-inspection reporting shall be performed in accordance with the terms and conditions of the Permit. SFWMD has the right to take enforcement action, including a civil action for an injunction and penalties against the Association to compel it to correct any outstanding problems with the Stormwater Management System or in any mitigation or conservation areas under the responsibility or control of the Association. No construction activities may be conducted relative to any portion of the Stormwater Management System. Prohibited activities include, but are not limited to: digging or excavation; depositing fill, debris or any other material or item; constructing or altering any water control structure; or any other construction to modify the Stormwater Management System facilities. If The Fields includes a Wetland mitigation area or a wet detention pond, no vegetation in these areas shall be removed, cut, trimmed or sprayed with herbicide without specific written approval from SFWMD. Construction and maintenance activities which are consistent with the design and Permit conditions approved by SFWMD in the Permit may be conducted without specific written approval from SFWMD. Neither the Developer, the Association, nor any Owner shall take any action which modifies the Stormwater Management System in a manner which changes the flow or drainage of surface water. Any amendment which would affect the Stormwater Management System and conservation areas or easements, including the water management portions of the Common Area must have the prior approval of SFWMD, Palm Beach County and any other governmental authority with jurisdiction. The Developer may reconfigure the size and location of the lakes, but only to the extent permitted by SFWMD. The Developer shall have an easement over The Fields for purposes of accessing the lakes and ancillary drainage facilities. The lakes shall not be available for use by Owners (except for catch and release fishing, to the extent allowed by the Permit and the Board of Directors) or the Association, nor shall they in any manner interfere with or alter

the Stormwater Management System or interfere with the access rights of any entity responsible for its maintenance. All Owners acknowledge that due to ground water elevations, priorities established by governmental authorities, and other causes outside of the control of SFWMD, the Developer and the Association, lake water levels may fluctuate at certain times during the year and such fluctuations may be material. None of the entities mentioned in the preceding sentence shall have any liability for aesthetic conditions, objectionable odors, damage to plantings or direct or consequential damages of any nature caused by the fluctuation of water levels or water quality. The Developer and the Association make no representations as to lake water levels

If the Association ceases to exist, all of the Owners shall be jointly and severally responsible for the operation and maintenance of the Stormwater Management System facilities in accordance with the requirements of the Permit, unless and until an alternate entity assumes responsibility, as more particularly set forth in Article III of the Articles of Incorporation.

The Association shall allocate sufficient funds in its budget for monitoring and maintenance of any wetland mitigation area(s) each year until the District determines that the area(s) is/are successful in accordance with the Permit.

The Developer may establish natural vegetative buffers between the Parcels and any jurisdictional Wetland preserve and/or conservation tract as may be required by the SFWMD, which buffer shall not be located within the boundaries of a Parcel unless otherwise approved by the SFWMD. Such buffers shall be platted as a separate tract or created as an easement over an expanded limit of the preserve tracts, which would be dedicated as preserve/drainage tracts, to include the buffer within the preserve tract. If the buffer is located within a separate tract, the tract shall be dedicated on the plat to the Association along with all maintenance responsibilities and, if necessary, to any governmental or quasi-governmental entities with no maintenance responsibilities. All Owners shall comply with the requirements of all governmental or quasi-governmental agencies or authority having jurisdiction.

The Developer has caused or will cause to be constructed within the geographic area shown on a plat, drainage canals, lakes and drainage retention/detention lakes or ponds. These drainage structures are part of the overall drainage plan for The Fields. The Developer may create conservation easements encumbering all or part of the Common Area, and/or portions of the Parcels conveyed to Owners to preserve the natural condition of wetlands, uplands or buffer areas. The Association shall have unobstructed ingress to and egress from all retention/detention lakes or ponds and lakes as well as all conservation easements at all reasonable times to maintain said lakes or ponds, lakes and conservation easements in a manner consistent with its responsibilities. No Owner shall cause or permit any interference with such access and maintenance. No Owner shall utilize, in any way, any of The Fields drainage facilities without the express prior written consent of the Developer and the Association. Further, where an Owner's Parcel is contiguous to any of the drainage facilities of The Fields, such Owner shall keep his or her Parcel so that the utilization of such Owner's Parcel will not adversely affect the drainage facilities and structures and so as to be aesthetically compatible with such drainage facilities and structures.

The Association shall maintain, as part of the Common Area, drainage structures for The Fields, the Preservation Areas, Conservation Areas and other environmentally significant Common Area, and comply with conditions of the Permit, Department of Environmental Protection, and U.S. Army Corps of Engineers for the Stormwater Management System, Preservation Areas, Conservation Areas, or other environmentally significant Common Area, including, without limitation, perpetual maintenance of all signage required by the permit. All such areas shall be defined, identified, and described as such on all Plats of The Fields, or may be granted by separate easements recorded in the public records of Palm Beach County. No Owner shall (i) undertake or perform any activity in preserved wetlands, upland

buffers to wetlands, archeological sites, and wetland compensation areas with the Preservation Areas and Conservation Areas described in all approved permits and Plats of The Fields, or (ii) remove native non-nuisance vegetation that becomes established within the wet detention lakes or ponds, without prior written consent of the Board of Directors of the Association, the County, and the applicable permitting agencies. Prohibited activities within such areas include removal of native vegetation (by dredging, application of herbicide or cutting); excavation; placement or dumping of soil, trash, land clearing or landscaping debris; and construction or maintenance of any building, residence, or structure. It shall be the responsibility of all Owners to comply with the construction plans for the Stormwater Management System approved by the applicable permitting agencies. The Association shall, when requested by the Developer, accept transfer of SFWMD permits applicable to The Fields. The conditions of SFWMD permits include monitoring and record keeping schedules and maintenance.

Within any Preservation Area or any wet detention lake or pond (as such lakes or ponds are designated by the SFWMD), no Member shall remove any native vegetation that may become established therein. The prohibition against removal of native vegetation shall not be construed to prevent the removal of exotic vegetation in accordance with a governmentally approved maintenance plan. It shall be the Association's responsibility to successfully meet and complete all conditions associated with annual exotic nuisance plant species maintenance and monitoring. The Association shall allocate sufficient funds as a line item in its annual budget for such maintenance and monitoring. Inquiries regarding provisions of this Article should be addressed to SFWMD.

Water quality data for the water discharged from The Fields or into the surface waters of the state shall be submitted to SFWMD as required. Parameters to be monitored may include those listed in Chapter 17-3 of the Florida Administrative Code. Analyses shall be performed according to procedures outlined in the current edition of Standard Methods for the Examination of Water and Wastewater by American Public Health Association of Methods for Chemical Analyses of Water and Wastes by the U.S. Environmental Protection Agency. If water quality data are required, the Association shall provide data as required on volume of water discharged, including total volume discharged during the days of sampling and total monthly discharge from The Fields or into surface waters of the state.

The Association agrees to operate and maintain the Stormwater Management System and has sufficient ownership so that it has control over all water management facilities authorized.

The Association shall hold and save SFWMD harmless from any and all damages, claims, or liabilities which may arise by reason of the operation, maintenance or use of any facility authorized by the permit.

The Association shall at all times properly operate and maintain the systems of treatment and control (and related appurtenances) that are installed or used to achieve compliance with conditions of the permit, as required by SFWMD. This provision includes the operation of backup or auxiliary facilities or similar systems when necessary to achieve compliance with the conditions of the permit and when required by SFWMD rules.

In the event the Association, or any successor organization, shall fail to adequately maintain the Stormwater Management System in accordance with Palm Beach County standards, Palm Beach County shall have the right, but not the obligation, to enter The Fields for the purpose of maintaining the Stormwater Management System. All expenses incurred by Palm Beach County in maintaining the Stormwater Management System shall be assessed prorata against the Parcels and shall be payable by the Owners of the Parcels within 60 days after receipt of a statement therefor. If any Owner fails to pay such assessment within such 60-day period, the assessment shall become a lien on such Owner's Parcel which may be foreclosed by Palm Beach County. The rights of Palm Beach County contained in this restriction

shall be in addition to any other rights Palm Beach County may have in regulating the operation and development of the Common Area.

The Association specifically agrees to allow authorized SFWMD personnel, upon presentation of credentials or other documents as may be required by law, access to The Fields, at reasonable times, where the permitted activity is located or conducted; for the purposes of inspection and testing to determine compliance with the permit and SFWMD regulations, such as: having access to and copying any records that must be kept under the conditions of the permit; inspecting the facility, equipment, practices, or operations regulated or required under the permit; sampling or monitoring any substances or parameters at any location reasonably necessary to assure compliance with the permit or SFWMD rules; and gathering of data and information. Reasonable time may depend on the nature of the concern being investigated.

Establishment and survival of littoral areas provided for storm water quality treatment in wet detention systems shall be assured by proper and continuing maintenance procedures designed to promote viable wetlands plant growth of natural diversity and character. Following as-built approval, perpetual maintenance shall be provided for the permitted system.

The Association shall submit inspection reports, if required by the SFWMD, in the form required by SFWMD, in accordance with the permit application.

In the event of casualty, it shall be the responsibility of each Owner within The Fields at the time of reconstruction of a building, residence, or structure, to comply with the construction plans for the Stormwater Management System pursuant to Chapter 40D4, F.A.C., approved and on file with SFWMD.

Owners are hereby notified that certain Parcels may include, or be adjacent to wet detention lakes or ponds, jurisdictional wetlands, designated mitigation areas or designated conservation easements. It is the Owner's responsibility not to remove native vegetation (including cattails) that becomes established within the wet detention lakes or ponds, jurisdictional wetlands, designated mitigation areas or designated conservation easements abutting the Owner's Parcel. Removal includes dredging, the application of herbicide, cutting, and the introduction of grass carp. Owners should address any question regarding authorized activities within the wet detention lakes or ponds, jurisdictional wetlands, designated mitigation areas or designated conservation easements to SFWMD, Palm Beach Service Office, Surface Water Permitting Department Regulation Manager and Palm Beach County's Resource Protection Office. SFWMD and Palm Beach County Resource Protection may authorize removal of certain exotic or nuisance vegetation upon application by Owners or the Association.

No Owner of a Parcel within The Fields may construct or maintain any building, residence, or structure, or undertake or perform any activity in the wetlands, wetland mitigation areas, buffer areas, upland conservation areas, wet detention lakes or ponds, jurisdictional wetlands, designated mitigation areas or designated drainage or conservation easements described in the approved permit and recorded plats of The Fields, unless prior approval is received from SFWMD, Palm Beach Regulation Department, pursuant to Chapter 40D-4, Florida Administrative Code and Palm Beach County's Resource Protection Office.

Each Owner of a Parcel within The Fields at the time of construction, and with the Association's approval of construction, of a building, residence, or structure shall comply with the construction plans for the Stormwater Management System approved and on file with the SFWMD. In the event of the termination, dissolution or final liquidation of the Association, the responsibility for the

operation and maintenance of the Stormwater Management System must be transferred to and accepted by an entity which would comply with Section 40C-42.027, Florida Administrative Code, and be approved by SFWMD prior to such termination, dissolution or liquidation.

It is expected that certain portions of the Stormwater Management System will serve the drainage needs of adjacent lands not owned by the Developer and not within the property subject to this Declaration. The Developer reserves the right to grant such drainage and/or use easements and rights as the Developer may deem necessary or appropriate for accomplishing the drainage needs of the property legally described in Exhibit "A" and/or lands owned by others provided that such agreements shall not unreasonably interfere with the use of the Stormwater Management System by the Owners or unreasonably increase the cost of maintenance of the system by the Association.

THE STORMWATER MANAGEMENT SYSTEM IS DESIGNED TO PROVIDE DRAINAGE FOR THE REAL PROPERTY LEGALLY DESCRIBED IN EXHIBIT "A". NEITHER THE ASSOCIATION NOR THE DEVELOPER SHALL HAVE ANY LIABILITY WHATSOEVER TO ANY OWNER FOR CLAIMS OR DAMAGES ALLEGED BY AN OWNER DUE TO WATER LEVELS IN THE LAKES BEING BELOW OR ABOVE NORMAL OR OTHERWISE UNACCEPTABLE TO THE OWNER. RECREATIONAL USE AND AESTHETIC APPEARANCE OF THE LAKES IS SECONDARY TO THEIR INTENDED DRAINAGE FUNCTION, AND DURING PERIODS OF PROLONGED DROUGHT OR OTHER UNUSUAL WEATHER EVENTS WATER LEVELS IN THE LAKES MAY FLUCTUATE, AND NEITHER THE ASSOCIATION NOR THE DEVELOPER SHALL HAVE ANY LIABILITY FOR SUCH CONDITIONS.

ANY AMENDMENTS TO THE DECLARATION RELATING TO THE STORM WATER MANAGEMENT SYSTEM MUST HAVE THE PRIOR WRITTEN APPROVAL OF THE COUNTY ENGINEER OR HIS DESIGNEE. ANY REVISIONS OF THE STORM WATER MANAGEMENT SYSTEM MUST HAVE THE PRIOR APPROVAL OF THE COUNTY ENGINEER OR HIS DESIGNEE.

8. INSURANCE: The Association shall obtain and maintain adequate insurance for the Common Area (with provisions for deductibles) as follows:

8.1 Casualty. To the extent that there is Common Area containing any improvements, the coverage shall afford protection against loss or damage by fire or other hazards covered by a standard extended coverage endorsement, and such other risks as are customarily covered with respect to improvements on the Common Area, including, but not limited to, flood (if required by law), vandalism, or malicious mischief. All or any part of such coverage may be extended to include the Association's personal property as the Board of Directors may deem desirable. The Association shall act as agent of the Owners and shall adjust all losses on their behalf with respect to the Common Area.

8.2 Liability. Premises and operations liability for bodily injury and property damage in such limits of protection and with such coverage as are determined by the Board of Directors, with cross liability endorsement to cover liabilities of the Owners as a group to an Owner, if obtainable at reasonable cost.

9. USE RESTRICTIONS.

9.1 Residential Purposes. No Parcel shall be used for other than Single Family residential purposes, except that Parcels, or portions of Parcels may be used by the Developer and Builders for offices, sales offices or models. No trade or business may be conducted in or from any Unit, except that

an Owner or occupant residing in a Unit may conduct business activities within the Unit so long as: (a) the existence or operation of the business activity is not apparent or detectable by sight, sound or smell from outside the Unit; (b) the business activity conforms to all zoning requirements; (c) the business activity involves only telephone calls and correspondence to and from the Unit and does not involve persons coming into The Fields who do not reside in The Fields or door-to-door solicitation of occupants of The Fields; and (d) the business activity is consistent with the residential character of The Fields and does not constitute a nuisance, or a hazardous or offensive use, or threaten the security or safety of other occupants of Units. The use of a Unit as a public lodging establishment shall be deemed a business or trade use. The terms "business" and "trade", as used in this provision, shall be construed to have their ordinary, generally accepted meanings, and shall include, without limitation, any occupation, work or activity undertaken on an ongoing basis which involves the provision of goods or services to persons other than the provider's family and for which the provider receives a fee, compensation, or other form of consideration, regardless of whether: (i) such activity is engaged in full or part-time; (ii) such activity is intended to or does generate a profit; or (iii) a license is required therefor.

9.2 Major Roadways. THE PROPERTY IS LOCATED ADJACENT TO AND/OR NEAR THE PLANNED MAJOR ROADWAYS OF LAKE WORTH ROAD (UP TO SIX LANES), POLO ROAD (UP TO FOUR LANES), 47TH PLACE SOUTH (UP TO 4 LANES) AND THE FLORIDA TURNPIKE (SIX LANES) AND MAY BE LOCATED ADJACENT TO OR NEAR OTHER EXPRESSWAYS AND/OR ARTERIAL OR MAJOR ROADWAYS (FOR THE PURPOSES OF THIS SUBSECTION, THE "MAJOR ROADWAYS"). BY ACCEPTANCE OF TITLE TO A PARCEL, EACH OWNER HEREBY ACKNOWLEDGES AND AGREES THAT USE OF THE PARCEL AND/OR UNIT SHALL BE SUBJECT TO LEVELS OF TRAFFIC THEREON AND NOISE, DUST, AND OTHER NUISANCE FROM SUCH MAJOR ROADWAYS AND VEHICLES TRAVELLING THEREON. ALSO, EACH UNIT IS LOCATED IN PROXIMITY TO STREETS AND OTHER PARCELS AND UNITS WITHIN THE PROPERTY, AND IS SUBJECT TO SUBSTANTIAL LEVELS OF SOUND AND NOISE FROM SUCH OTHER PARCELS, UNITS AND STREETS. DEVELOPER IS REQUIRED UNDER THE STATE OF FLORIDA GUIDELINES TO CONSTRUCT CERTAIN NOISE MITIGATION IMPROVEMENTS ON THE PROPERTY CONSISTING OF (X) A 15 FOOT HIGH COMBINATION BERM/WALL IN A NORTH/SOUTH ALIGNMENT FOR THE LENGTH OF THE PROPERTY ADJACENT TO THE FLORIDA TURNPIKE, AND (Y) AN 8 FOOT HIGH WALL ALONG THE SOUTH SIDE OF THE PROPERTY. SIMILAR BERM/WALL COMBINATIONS HAVE BEEN DETERMINED TO BE EFFECTIVE IN KEEPING NOISE LEVELS BELOW THE STATE GUIDELINES' NOISE ABATEMENT CRITERIA LEVEL OF 66 DECIBELS. DEVELOPER HEREBY WARRANTS THAT OWNERS SHALL NOT BE SUBJECT TO SUSTAINED NOISE LEVELS FROM THE MAJOR ROADWAYS OR STREETS IN EXCESS OF THE STATE OF FLORIDA GUIDELINES; HOWEVER, DEVELOPER DOES NOT MAKE ANY OTHER REPRESENTATION OR WARRANTY AS TO THE LEVEL OF SOUND TRANSMISSION BETWEEN AND AMONG PARCELS OR FROM THE MAJOR ROADWAY AND/OR OTHER STREETS AND THE PARCELS. EXCEPT WITH RESPECT TO DEVELOPER'S WARRANTY THAT THE NOISE LEVEL SHALL NOT EXCEED THE LEVEL REQUIRED UNDER THE STATE OF FLORIDA GUIDELINES, EACH OWNER HEREBY WAIVES AND EXPRESSLY RELEASES ANY SUCH WARRANTY AND CLAIM FOR LOSS OR DAMAGES RESULTING FROM SOUND TRANSMISSION. IF ANY FUTURE NOISE MITIGATION IMPROVEMENTS ARE REQUESTED BY ANY PARTY, PALM BEACH COUNTY SHALL NOT CONSTRUCT SUCH NOISE MITIGATION IMPROVEMENTS.

9.3 Signs. No sign or advertisement of any kind, including, without limitation, those of realtors, contractors and subcontractors, shall be erected within The Fields without the prior written consent of the Board of Directors or in accordance with the Rules and Regulations and Architectural Review Guidelines, except in connection with the sale or resale of Parcels by the Developer, Builders or

as may be required by legal or zoning proceedings. Signs which are permitted within The Fields may be restricted as to the size, color, lettering, materials and location of such signs. The Board of Directors, the Developer and Builders shall have the right to erect signs as they, in their discretion, deem appropriate, except that no Builder may erect a sign without the prior written approval of the Developer. Under no circumstances shall signs, flags, banners or similar items advertising or providing directional information with respect to activities being conducted outside The Fields be permitted within The Fields without the express written consent of the Board of Directors, or unless they are installed by the Developer. No sign shall be nailed or otherwise attached to trees.

9.4 Nuisance. Nothing shall be done upon any Parcel or in any Neighborhood or in the Common Area which may be or may become an annoyance or nuisance to any person. No obnoxious, unpleasant or offensive activity shall be carried on, nor shall anything be done which can be reasonably construed to constitute a nuisance, public or private in nature. All residents shall observe the vehicular speed limits and any rules posted on signs in the Common Area.

9.5 Underground Utility Lines and Services. All electric, telephone, gas and other utility lines shall be installed underground, except for temporary lines as required during construction or if required by law.

9.6 Common Area. No Owner shall make use of the Common Area in such a manner as to abridge the equal rights of the other Owners to their use and enjoyment thereof nor shall any Owner remove, prune, cut, damage or injure any trees or other landscaping located in the Common Area. Except as otherwise provided in this Declaration and its exhibits or with respect to the Developer's reserved rights, any portion of the Common Area which is deemed open space shall be owned by the Association and preserved and maintained by it and shall not be destroyed.

9.7 Pets and Animals. No animals, livestock or poultry of any kind shall be raised, bred or kept on any Parcel, except that dogs, cats and other usual and non-exotic household pets (not to exceed a total of three (3) pets, excluding tropical fish) may be kept (except for pit bulls, "wolf hybrids", or other dogs prone to or exhibiting aggressive behavior), provided they are not kept, bred or maintained for any commercial purposes. All animals shall be contained on the Owner's Parcel and shall not be permitted to run freely. When outside the Owner's Unit, all pets must be carried or secured with a hand held leash. The person walking the pet must be in physical control of the leash at all times. The Owner or other owner of a permitted pet must pick up all solid waste and deposit it in an appropriate trash container.

9.8 Trucks, Commercial Vehicles, Recreation Vehicles, Mobile Homes, Boats, Campers and Trailers.

9.8.1 Vans, pick-up trucks, passenger cars and sport utility vehicles shall be considered to be automobiles and may be parked on driveways if the vehicle is used for the primary purpose of transportation of passengers and their personal goods. Such vehicles may be parked on driveways overnight. If the vehicle is used primarily for the transportation of goods then it shall be considered to be a truck. Law enforcement vehicles may be parked on driveways and in parking spaces if the driver is a law enforcement officer. All other vehicles (i.e. all motorized and non-motorized vehicles except operable automobiles) including, without limitation, the following: inoperable automobiles, golf carts, commercial vehicles, recreational vehicles, all-terrain vehicles, ambulances, hearses, motorcycles, motorbikes, bicycles, watercraft, aircraft, house trailers, camping trailers, other trailers, vehicles with commercial markings, racks or tools in the bed and tractors shall be kept within an enclosed garage. Parking in any road is prohibited. Parking in any portion of the Common Areas designated for such purpose is permitted, but overnight parking is prohibited. Bicycle racks are permitted on non-commercial vehicles. Garage doors must be kept closed except when a vehicle must enter or exit the garage or for

reasonable periods of time while the Unit's occupant(s) use the garage for typical uses associated with a residential dwelling which are not in conflict with the Governing Documents. Any use of a motorcycle is limited to providing ingress/egress to a Parcel over roadways. All motorcycles shall be equipped with effective sound muffling devices and must be parked in a garage when not in use.

9.8.2 No commercial vendor vehicle of any kind shall be permitted to be parked on a residential Parcel for a period of more than twelve (12) daylight hours unless such vehicle is necessary and being used in the actual construction or repair of a structure or for grounds maintenance. Commercial vendor vehicles may not be parked in the Common Areas overnight.

9.8.3 None of the foregoing restrictions shall apply to commercial vehicles or other vehicles which may be utilized by: the Developer, Builders and their contractors and subcontractors for purposes of completing construction of The Fields, Parcels and Units; the Association, its vendors and employees; and any governmental authority, taxing district, the CDD, private or public utility or SFWMD.

9.9 Exterior Colors; Building Materials. No exterior colors on any structure, nor the colors of driveways and walkways shall be permitted that, in the sole judgment of the Architectural Reviewer, would be inharmonious or incongruous with the remainder of The Fields. Any future color changes, as described above, desired by Owners must be first approved in writing by the Architectural Reviewer. The restrictions set forth in this paragraph shall not apply to the Developer or Builders.

9.10 Landscaping. All areas not covered by structures, walkways, paved parking facilities or areas approved by the Association to be left in their natural state shall be maintained as lawn or landscape areas to the pavement edge of any abutting streets or driveways, as applicable, and to the waterline of any abutting lakes, canals or surface water management areas. All lawn and landscaped areas shall be kept in good and living condition.

9.11 Driveways and Parking Areas. All driveways shall be constructed of concrete or paverstone. The Owner shall be obligated to keep his driveway clean and well maintained.

9.12 Antennas and Flagpoles. Antennas and satellite dishes are prohibited, except that (a) antennas or satellite dishes designed to receive direct broadcast satellite service which are one (1) meter or less in diameter (b) antennas or satellite dishes designed to receive video programming services via multi-point distribution services which are one (1) meter or less in diameter; or (c) antennas or satellite dishes designed to receive television broadcast signals, ("Reception Device") shall be permitted, provided that the Reception Device is located so as not to be visible from outside the Unit, or is located on the side or rear yard of the Parcel. The Architectural Reviewer may require that a Reception Device be painted or screened by landscaping in order to blend into the Unit and removed from view from the street and other Units. A flagpole shall not be used as an antenna. The installation and display of flagpoles and flags shall be subject to regulation by the Architectural Reviewer, but no Owner shall be prevented from displaying one (1) portable, removable official United States flag or official flag of the State of Florida in a respectful manner, or on Armed Forces Day, Memorial Day, Flag Day, Independence Day and Veterans Day, a portable, removable US Army, Navy, Air Force, Marine Corps or Coast Guard flag. The permitted flags shall not exceed 4.5' x 6'. Notwithstanding the foregoing, no one shall be permitted to display the United States flag in a manner that violates: (i) Federal law or any rule or custom as to the proper display or use of the United States flag; or (ii) any reasonable restriction pertaining to the time, place and manner of displaying the flag. The restriction must be necessary to protect a substantial interest of the Association.

9.13 Outdoor Equipment. All oil tanks, bottled gas tanks, swimming pool equipment, housing and sprinkler pumps and other such outdoor equipment must be walled-in or placed in sight-screened or fenced-in areas so that they shall not be readily visible from any adjacent streets or Units. Otherwise, adequate landscaping shall be installed and maintained around these facilities. All trash containers shall be stored in the garage except on trash "pick up" days. The Fields shall be equipped with dual water lines, one (1) of which shall be designated to utilize non-potable water. All underground irrigation systems must be connected to the non-potable water line and all spigots on the exterior portion of a structure shall be connected to the potable water line.

9.14 Air Conditioning and Heating Equipment. All air conditioning and heating units shall be shielded and hidden so that they shall not be readily visible from any adjacent streets or Units. Window or wall air conditioning units are prohibited.

9.15 Solar Collectors. The Architectural Reviewer must approve the location of the materials used in the construction of solar collectors.

9.16 Walls, Fences, Window Coverings and Hurricane Shutters. Except as otherwise provided in Section 9.12 and walls installed by Developer, no wall shall be constructed on any Parcel. Owners may install fences, subject to specifications adopted by the Architectural Reviewer. Owners may install hurricane shutters, subject to specifications adopted by the Architectural Reviewer. The Architectural Reviewer shall have the authority to adopt hurricane shutter specifications, which may include color, style, time periods in which shutters may be kept closed, and other factors deemed relevant by the Architectural Reviewer. Laminated glass and window film architecturally designed to function as hurricane protection which complies with the applicable building code, may be used in place of hurricane shutters, except that reflective window coverings are prohibited. An Owner who intends to be absent from his Unit during the hurricane season (June 1st through November 30th of each year) shall prepare his Unit prior to his departure by: removing all furniture, potted plants, and other movable objects from his yard; and designating a person or firm, satisfactory to the Association, to care for his Unit should it suffer hurricane damage. Such person or firm shall contact the Association for permission to install temporary hurricane shutters, which may not be installed more than seventy-two (72) hours in advance of a hurricane and must be removed within seventy-two (72) hours after the hurricane has passed.

9.17 Lighting. Except for seasonal decorative lights, the exterior lighting of a Parcel shall be accomplished in accordance with a lighting plan approved in writing by the Architectural Reviewer. Seasonal decorative lights may be displayed on Halloween and between the day after Thanksgiving and January 10th only.

9.18 Developer. As used in this Section, when the Association's or the Architectural Reviewer's approval is required, it shall, up to the Turnover Date, mean the "Developer's approval" (unless the Developer has delegated its architectural review functions to the ARC or the Board of Directors). After the Turnover Date, the Developer's approval shall also be required as long as the Developer owns a Parcel or other property within The Fields.

9.19 Clothes Drying Area/Clotheslines. No outdoor clothes drying area or clotheslines are permitted.

9.20 Pools. Above ground pools are prohibited.

9.21 Drones and Other Aerial Devices. No drones or other aerial devices such as motorized planes shall be flown or otherwise used in The Fields.

9.22 Oil, Gas and Mineral Rights. The Developer makes no representations as to whether ownership of a Parcel includes ownership of any oil, gas and mineral rights.

9.23 Subdivision of Parcels. Parcels shall not be further subdivided or separated by any Owner other than the Developer or a Builder (in the case of a Builder, subject to Developer's prior written consent). However, the preceding sentence shall not prevent corrective deeds or deeds to resolve boundary disputes.

9.24 Workforce Housing Program. Pursuant to Palm Beach County requirements, certain Parcels within the Fields may be subject to Palm Beach County's Workforce Housing Program, and, therefore, are to be sold, transferred and occupied in accordance with the Master Declaration of Restrictive Covenant for Workforce Housing in Accordance with the Palm Beach County Workforce Housing Program (For Sale Development) recorded in Official Records Book _____, Page _____ of the Public Records of the Palm Beach County, Florida, as it may be amended from time to time (the "Workforce Housing Covenant"). During the period of time that a Parcel is subject to the Palm Beach County Workforce Housing Program and is required to be sold, transferred and occupied in accordance with the Palm Beach County's Workforce Housing Code, such Parcel shall be referred to as a "Workforce Housing Parcel". Once a Workforce Housing Parcel is no longer subject to the Palm Beach County Workforce Housing Code, such Parcel shall no longer be subject to this paragraph. Nothing contained herein or in the Workforce Housing Covenant shall release any portion of the Fields (including any Workforce Housing Parcels) from, and all portions of the Fields shall remain subject to, the terms and provisions of this Declaration.

9.25 Environmental Provisions.

9.25.1 Environmental Disclosure. Portions of the Property have been used as a polo field and for other polo related activities. Onsite soils have been tested and reviewed by the Palm Beach County Department of Environmental Resources Management (the "Agency"), and there are no indications that onsite soils contain contaminants above the target levels for residential use established by the Florida Department of Environmental Protection (the "FDEP"). The Agency requires that a deed restriction be placed on affected property to prohibit the use of groundwater when certain contaminants, including arsenic, are detected in groundwater above target levels. Therefore, pursuant to the requirements of the Agency, on _____, 2017, Developer recorded on the Property that certain Declaration of Restrictive Covenants, in Official Records Book ___, Page ___, in the Public Records of Palm Beach County, Florida (the "Restrictions"). The Restrictions prohibit use, access, and withdrawal of groundwater within the Property for consumption, irrigation or any other purpose, and further prohibit the drilling or construction of wells, all as more particularly set forth in the Restrictions. Drinking water and irrigation water for the Fields do not come from groundwater on the Property and are not subject to any restrictions. The Restrictions may be modified, amended or replaced, if determined to be necessary in the sole and absolute discretion of the Agency or Developer (the "Modified Restrictions"). Each Owner, Mortgagee, and other interest holder consents to the subsequent imposition by Developer, of any such Modified Restriction, without further approval, consent or joinder by such Owner or Mortgagee, with respect to the Property by acceptance of title to or mortgage, leasehold, license or other interest in any portion of the Property subject to the Restrictions and this Declaration.

9.25.2 Right of Entry and Enforcement. In addition to all other rights reserved in favor of the Agency, Developer, and Association pursuant to the Declaration, Restrictions or Modified Restrictions, Developer hereby reserves, grants, and conveys to Developer and Association a right of entry to the Property, including Units, Parcels, Common Areas and other property within the Fields to implement and ensure compliance with the Restrictions, Modified Restrictions or other applicable rule, policy or regulation promulgated by the Agency or FDEP. The Agency may enforce such terms and

conditions by injunctive relief and other legal remedies as more particularly set forth in the Restrictions or Modified Restrictions. Each Owner or grantee of any interest in the Property, by acceptance of a deed or other conveyance, acknowledges and agrees to make reference to the Restrictions or Modified Restrictions in any subsequent deed, lease, license or other conveyance of any portion of the Property.

9.25.3 Waiver and Release of Liability. Owners, occupants, users, and invitees of Units, Parcels, Common Areas or the Community are hereby notified of the environmental disclosures set forth in subsection 9.25.1 above and the right of entry and enforcement in favor of Developer and Association set forth in subsection 9.25.2 above. Owners, occupants, users, and invitees of Units, Parcels, Common Areas or the Fields acknowledge, stipulate, and agree that (i) purchase or use of a Unit and/or Parcel, or portion of a Unit and/or Parcel or the Fields has been made with full knowledge of such disclosures; (ii) Developer, Association, and their respective, officers, directors, managers, partners, affiliates, contractors, consultants, attorneys, and agents, and the successors and assigns of each ("Listed Parties"), shall not be liable for any losses, damages (compensatory, consequential, punitive or otherwise), injuries or deaths arising from or relating to (x) the presence of groundwater contaminants in the Fields, including their respective Units and Parcels; and (y) this acknowledgment and agreement is a material inducement to Developer or its Affiliates to sell, convey, lease and/or allow use of Units, Parcels or Common Areas in the Fields. Without limiting the generality of the foregoing and by virtue of their acceptance of the deed to, or use of, such Property within the Fields, all Owners, occupants, users, and invitees of any portion of the Fields shall have agreed to release, and do hereby release, such Listed Parties from all claims, actions, liabilities, causes of action arising from or related to the location of contaminants within the groundwater for the Fields, including their respective Units and Parcels.

10. DEVELOPER'S AND ASSOCIATION'S EXCULPATION. The Association and the Developer may grant, withhold or deny its permission or approval in any instance where its permission or approval is permitted or required without incurring liability of any nature to the Owners or any other person for any reason whatsoever. Any permission or approval granted shall be binding upon all persons.

11. ENFORCEMENT OF COVENANTS AND ABATEMENT OF VIOLATIONS. Every Neighborhood Association, Owner and the Owner's Family members, Tenants, Guests and invitees shall at all times comply with all the covenants, conditions and restrictions of the Governing Documents. All violations of the Governing Documents shall be reported immediately to the Association's property manager. Before undertaking any remedial, disciplinary or enforcement action against a person alleged to be in violation, the Association shall give the alleged violator reasonable written notice of the alleged violation, except in emergencies. Disagreements concerning violations, including, without limitation, disagreements regarding the proper interpretation and effect of the Governing Documents, shall be presented to and determined by the Board of Directors, whose interpretation and/or whose remedial action shall control. If any person, firm or entity subject to the Governing Documents fails to abide by them, as they are interpreted by the Board of Directors, then the Association, Developer or any Member shall have the ability to take any action to compel compliance as set forth below:

11.1 Legal Action. Judicial enforcement of the Governing Documents shall be by any proceeding at law or in equity against any person or persons violating or attempting to violate the Governing Documents, to restrain violation and/or to recover damages, or against the land to enforce any lien created by these covenants; and failure by the Association or any Owner to enforce any covenant or restriction herein contained shall in no event be deemed a waiver of the right to do so thereafter. If such action is instituted, the prevailing party shall, in addition, be entitled to recover its costs and attorney's fees incurred in enforcing the Governing Documents. Certain disputes must be submitted to dispute resolution procedures as more particularly set forth in Section 720.311 of the Act.

11.2 Entry by Association and/or the Developer. Violation of any conditions or restrictions, or breach of any covenant, herein contained or in any of the Governing Documents, shall also give the Developer, its successors and assigns, and/or the Association and its authorized agent or representative, in addition to all other remedies, the right to enter upon the Parcel where such violation or breach exists and in the event of an emergency, summarily abate and remove, at the expense of the Owner any construction or other violation that may be or exist thereon. The Developer, its successors and assigns and/or the Association and its authorized agents shall not thereby become liable in any manner for trespass, abatement or removal.

11.3 Fines. The Board of Directors may levy a fine or fines against an Owner for failure of the Owner, his Family, Guests, invitees, Tenants, or agents of any of the foregoing, to comply with any covenant, restriction, rule, or regulation contained herein or promulgated pursuant to the Governing Documents. Fines shall not be secured by a lien against the Parcel, unless permitted by the Act. Fines may be levied in accordance with the procedures set forth in the Bylaws and the Act.

11.4 Alternative Method for Resolving Disputes with Developer and Developer Appointees. In any dispute ("Claim") between the Association, a Neighborhood Association, or any Owner, Tenant, Guest, occupant or invitee against the Developer, or its directors, officers, agents and employees, or against any directors or officers of the Association or a Neighborhood Association appointed by the Developer prior to the Turnover Date, mediation and then final and binding arbitration shall apply. The procedures set forth in subsections 11.4.1 through 11.4.5 below shall apply, except in the case of a Claim alleging a construction defect brought against the Developer by the Association, that is governed by Chapter 558 Florida Statutes, in which case the procedures set forth in subsections 11.4.1 through 11.4.5 shall be modified as described in subsection 11.4.7:

11.4.1 Any party having a Claim ("Claimant") against the other party ("Respondent") shall notify the Respondent in writing ("Notice"), stating plainly and concisely:

(1) the nature of the Claim, including the persons involved and the Respondent's role in the claim;

(2) the legal basis of the Claim (i.e., the specific authority out of which the Claim arises);

(3) Claimant's proposed remedy; and

(4) that Claimant will meet with Respondent to discuss in good faith ways to resolve the Claim.

11.4.2 The parties shall make every reasonable effort to meet in person and confer for the purpose of resolving the Claim. If the parties do not resolve the Claim within thirty (30) days of the date of the Notice (or within such other period as may be agreed to by the parties), Claimant shall have ten (10) days in which to submit the Claim to mediation under the auspices of a mediator certified by the applicable Judicial Circuit. If Claimant does not submit the Claim to mediation within such time, or does not appear for the mediation conference, Claimant shall be deemed to have waived the Claim, and Respondent shall be released and discharged from any and all liability to Claimant on account of such Claim; provided, nothing herein shall release or discharge Respondent from any liability to any person other than the Claimant. Any settlement of the Claim through mediation shall be documented in writing by the mediator and signed by the parties. If the parties do not settle the Claim at the mediation conference, the mediator shall issue a notice of an impasse and the date the mediation was terminated.

The mediation conference shall occur within sixty (60) days of the Notice unless the parties agree to an extension.

11.4.3 If the mediation results in an impasse, then either party shall have ten (10) additional days in which to submit the Claim to final and binding arbitration in accordance with the Construction Industry Arbitration Rules of the American Arbitration Association ("AAA), in the case of a construction defect claim and the Federal Arbitration Act (Title 9 of the United States Code). If not timely submitted to arbitration or if the Claimant does not appear for the arbitration hearing, Claimant shall be deemed to have waived the Claim, and Respondent shall be released and discharged from any and all liability to Claimant on account of such Claim; provided, nothing herein shall release or discharge Respondent from any liability to any person other than the Claimant. This subsection 11.4.3 is an agreement to arbitrate and is specifically enforceable under Chapter 682, Florida Statutes. The arbitration award shall be final and binding, and judgment may be entered upon it in any court of competent jurisdiction to the fullest extent permitted under the laws of the State of Florida.

11.4.4 In any dispute under this Section, the parties shall share the fees and costs associated with mediation. In the case of arbitration, the prevailing party shall be entitled to judgment for its reasonable attorney's fees and costs incurred.

11.4.5 If the parties agree to a resolution of any Claim through negotiation, mediation or arbitration under this Section, and any party thereafter fails to abide by the terms of such agreement, or if any party fails to comply with an arbitrator's final order, then any other party may file suit in a court of competent jurisdiction to enforce such agreement or final order without the need to again comply with the procedures set forth above. In such event, the party taking action to enforce the agreement or final order shall be entitled to recover from the non-complying party (or if more than one (1) non-complying party, jointly and severally), all costs incurred in enforcing such agreement or final order, including, without limitation, reasonable attorney's fees and costs.

11.4.6 This Section shall not apply to a dispute between an Owner and the Developer concerning the purchase and sale and construction of a Parcel or Unit. Those disputes shall be governed by the provisions of any purchase and sale agreement or construction agreement.

11.4.7 In the case of a Claim alleging a construction defect brought against the Developer or a Builder by the Association that is governed by Chapter 558, Florida Statutes, the parties to the dispute shall follow the procedures set forth therein. If the Claimant has followed the procedures set forth in Chapter 558, Florida Statutes, and is entitled to proceed with an "action" (as defined therein) the Claimant shall then have ten (10) days in which to submit the Claim to final and binding arbitration as described in subsections 11.4.3-11.4.5 above.

12. LEASING, CONVEYANCE, DISPOSITION. In order to maintain a community of congenial, financially responsible residents with the objectives of inhibiting transiency, protecting the value of the Parcels and facilitating the development of a stable, quiet community and peace of mind for all residents, the lease, and transfer of ownership of a Parcel by an Owner shall be subject to the following restrictions, which each Owner covenants to observe (except for the exceptions set forth in Section 12.5 below):

12.1 Forms of Ownership:

12.1.1 A Parcel may be owned by one (1) natural person who has qualified and been approved as elsewhere provided herein.

12.1.2 Co-Ownership. Co-ownership of Parcels may be permitted. If the proposed co-Owners are other than husband and wife or two (2) individuals who reside together as a single housekeeping unit, they shall designate two (2) individuals as the "Primary Occupants". The use of the Parcel by persons other than the Primary Occupants shall be as though the Primary Occupants were the only actual Owners. The intent of this provision is to permit multiple Owners, but to prohibit short term, transient use by several individuals or families. Any change in the Primary Occupants shall be treated as a transfer of ownership by sale or gift, subject to all of the provisions of this Section. No more than one (1) such change may be made in any twelve (12) month period.

12.1.3 Ownership by Corporations, Partnerships or Trusts. A Parcel may be owned in trust, or by a corporation, partnership or other entity which is not a natural person, if approved in the manner provided for other transfers or title. However, the intent of this provision is to allow flexibility in estate, financial or tax planning, and not to create circumstances in which the Parcel may be used as short term transient accommodations for several individuals or families. A trust, corporation or other entity shall designate two (2) individuals as the "Primary Occupants". The use of the Parcel by persons other than the Primary Occupants shall be as though the Primary Occupants were the only actual Owners. Any change in the Primary Occupants shall be treated as a transfer of ownership by sale or gift, subject to all the provisions of this Section. No more than one (1) such change may be made in any twelve (12) month period. The Developer and Builders shall not be obligated to designate Primary Occupants.

12.1.4 Life Estate. A Parcel may be subject to a life estate, either by operation of law or by voluntary conveyance. In that event, the life tenant shall be the only Member from such Parcel, and occupancy of the Parcel shall be as if the life tenant were the only Owner. Upon termination of the life estate, the holders of the remainder interest shall have no occupancy right unless separately approved by the Association. The life tenant and holders of the remainder interest shall be jointly and severally liable for all Assessments and charges against the Parcel. The life tenant may, by signed agreement, transfer the right to vote in all Association matters to any one remainderman, subject to approval by the Association of such arrangement. Except in the case where such a transfer has been made, if the consent or approval of the Owner is required for any purpose, that consent or approval of the holders of the remainder interest shall not be required.

12.2 Transfers and Leases. Prior to the conveyance or transfer of title to a Parcel or lease of a Unit, it shall be the Owner's responsibility to provide the purchaser or Tenant with the complete set of Governing Documents and any other documents required by law.

12.2.1 Lease, Sale or Gift. No Owner may effectively convey or transfer title to a Parcel or any interest therein by sale or gift without notification to the Association. In addition, no Owner may effectively lease a Unit without the prior written approval of the Board of Directors.

12.2.2 Devise or Inheritance. If any Owner acquires his title by devise or inheritance, he shall provide the Association with written notice as set forth in Section 12.3 herein.

12.3 Procedures.

12.3.1 Notice to Association.

(1) Lease, Sale or Gift. An Owner intending to lease his Unit or sell or make a gift of his Parcel or any interest therein, shall provide the Board of Directors or its designee, written notice of such intention at least twenty (20) business days prior to the first date of occupancy pursuant to the proposed Lease or the date of closing, together with a copy of the purchase and sale agreement or Lease, and the name, and address of the proposed Tenant, purchaser or donee and such other information

as the Board of Directors may reasonably require. The Association may charge a transfer fee in connection with processing each application.

(2) Devise or Inheritance. The transferee must notify the Association of his ownership and submit to the Association a certified copy of the instrument evidencing his ownership and such other information as the Board of Directors may reasonably require. The transferee shall have no occupancy right unless approved by the Board of Directors, but may sell or lease the Parcel in accordance with the procedures provided in this Declaration.

(3) Failure to give Notice. If no notice is given, the Association at its election may approve or disapprove the lease without prior notice. If it disapproves, the Association shall proceed as if it received notice on the date of such disapproval; however, the proposed transferee may provide the Board of Directors with the required notice and request reconsideration. The Association shall not have the authority to disapprove a proposed conveyance or other transfer.

Within twenty (20) business days of receipt of the required notice and all information requested, the Board of Directors shall approve or disapprove the Lease, and shall approve the conveyance or transfer. When the conveyance, transfer or Lease is approved, the approval shall be stated in a Certificate of Approval executed by the President, Vice-President or property manager of the Association (in recordable form for a conveyance or transfer) and delivered to the purchaser, transferee or Tenant. If the Board of Directors neither approves or disapproves within twenty (20) business days, such failure to act shall be deemed the equivalent of approval, and on demand the Board of Directors shall issue a Certificate of Approval to the Owner, purchaser or transferee.

12.3.2 Disapproval of Leases.

(1) The Board of Directors may disapprove a proposed Lease only if a majority of the whole Board of Directors votes to disapprove the Lease unless the authority to disapprove a Lease has been delegated to an Association officer. Only the following shall be deemed to constitute good cause:

(A) The person seeking approval has been convicted of a felony involving violence to persons or property, or a felony demonstrating dishonesty or moral turpitude;

(B) The person seeking approval has a record of financial irresponsibility, including without limitation prior bankruptcies, foreclosures or bad debts;

(C) The application for approval on its face indicates that the person seeking approval intends to conduct himself in a manner inconsistent with the Governing Documents and any other covenants and restrictions applicable to The Fields;

(D) The person seeking approval has a history of disruptive behavior or disregard for the rights and property of others as evidenced by his conduct in other social organizations or associations, or by his conduct as a Tenant, Owner or occupant of a Unit; or

(E) The person seeking approval failed to provide the information and appearance required to process the application in a timely manner.

(F) The Owner is delinquent on Assessments and other sums owed to the Association at the time of application.

12.4 Leasing. Only entire Units may be leased. The minimum leasing period is two hundred and ten (210) consecutive days and no Unit may be leased more than one (1) time in any one (1) calendar year. For purposes of this restriction, the first day of occupancy under the Lease shall conclusively determine in which year the Lease occurs. No Unit may be used on a "time share" basis. All Leases must and shall be deemed to contain the agreement of the Tenant(s) to abide by all of the restrictions contained in the Governing Documents and shall be deemed to provide that a violation thereof is grounds for damages, termination and eviction and that the Tenant and the Owner agree that the Association may proceed against either the Owner or the Tenant and that the Owner or the Tenant shall be responsible for the Association's costs and expenses, including attorney's fees and costs, secured by a lien against the Parcel.

12.5 Exceptions With Respect to the Developer and Institutional Mortgagees. The provisions of Section 12 are not applicable to the lease of a Unit or the sale or transfer of title of a Parcel by the Developer to any person. Except for Section 12.4, the provisions of this Section are not applicable to the acquisition of title to a Parcel by an Institutional Mortgagee which acquires title through the Institutional Mortgage, whether by foreclosure or deed in lieu of foreclosure, nor to the subsequent lease of a Unit or the resale or transfer of title of a Parcel by such Institutional Mortgagee, but shall apply to the lease of a Unit or the acquisition of title of a Parcel by any other person.

12.6 Unapproved Leases. Any Lease which is not approved pursuant to the terms of this Declaration shall be void unless subsequently approved in writing by the Board of Directors.

13. DEVELOPER'S RIGHTS AND DUTIES. Until the Developer has completed all of the contemplated improvements, the Developer and Builders have conveyed all of the Parcels that may be subjected to this Declaration, and are not leasing a Unit from an Owner, the following shall apply, notwithstanding any other provisions to the contrary.

13.1 Developer's and Builder's Use. Neither the Owners nor the Association or a Neighborhood Association, nor their use of the Parcels, Units, or Common Area shall interfere with the completion of the contemplated improvements, leases of Units or sales and conveyances of Parcels by the Developer and Builders. The Developer may make any use of unsold Parcels, Units and Common Area as may reasonably be expected to facilitate completion, sales and conveyances of Parcels, including, but not limited to, maintenance of sales offices and construction trailers, display of signs, leasing of Units, use of parking areas and showing Parcels, Units and the remainder of The Fields to prospective purchasers and Tenants. With the prior written approval of the Developer, Builders may make any use of unsold Parcels and Units as may reasonably be expected to facilitate completion and sales, including, but not limited to, maintenance of sales offices and construction trailers, display of signs, use of parking areas, leasing of Units, and showing Parcels, Units and the remainder of The Fields to prospective purchasers and Tenants. The Developer may utilize any model homes, sales offices, construction trailers, parking areas, etc., for use in marketing developments other than The Fields.

13.2 Assignment of Development Rights. All or any portion of the rights, privileges, powers and duties of the Developer set forth in the Governing Documents may be assigned by the Developer to any person or entity, without the consent of any other Owner or any holder of a mortgage secured by any Parcel. In the event of such assignment (other than to a mortgagee or its successors or assigns), the assignee shall assume such rights, powers and duties, and the Developer shall be relieved of all further liability or obligation, but only to the extent of the assignment.

14. DURATION OF COVENANTS: AMENDMENT OF DECLARATION:

14.1 Duration of Covenants. The covenants, conditions and restrictions of this Declaration shall run with and bind The Fields, and shall inure to the benefit of and be enforceable by the Association, the Developer and any Owner, their respective legal representatives, heirs, successors and assigns, for an initial period to expire on the thirtieth (30th) anniversary of the date of recordation of this Declaration (as amended to that date by the Developer or the Members as provided elsewhere herein). Upon the expiration of the initial period, this Declaration shall be automatically renewed and extended for successive ten (10) year periods. The number of ten (10) year renewal periods hereunder shall be unlimited, with this Declaration being renewed and extended upon the expiration of each ten (10) year renewal period for an additional ten (10) year period; provided, however, that there shall be no renewal or extension of this Declaration if during the last year of the initial period, or during the last year of any subsequent ten (10) year renewal period, ninety percent (90%) of Voting Interests, at a duly held meeting of Members, vote in favor of terminating this Declaration at the end of its then current term. It shall be required that written notice of any meeting at which such proposal will be considered, shall be given at least forty-five (45) days in advance of said meeting. If the Members vote to terminate this Declaration, the President or Vice President of the Association shall execute a certificate with the formalities of a deed, which shall set forth the Book and Page of the Public Records of Palm Beach County, Florida in which this Declaration is recorded, the resolution of termination so adopted, the date of the meeting of the Association, the total number of votes cast in favor of such resolution and the total number of votes cast against such resolution. Said certificate shall be recorded in the Public Records of Palm Beach County, Florida, and may be relied upon for the correctness of the facts contained therein as they relate to the termination of this Declaration.

14.2 Proposal. Subsequent to the Turnover Date, amendments to this Declaration may be proposed by the Board of Directors or by written petition signed by one-fourth (1/4) of the Voting Interests. If by petition, the proposed amendments must be submitted to a vote of the Members not later than the next annual meeting.

14.3 Vote Required. Except as otherwise provided by law, or by specific provision of the Governing Documents, this Declaration may be amended if the proposed amendment is approved by at least two-thirds (2/3) of the Voting Interests, provided that the text of each proposed amendment has been given to the Members with notice of the meeting.

14.4 Certificate; Recording. A copy of each amendment shall be attached to a certificate that the amendment was duly adopted as an amendment to this Declaration, which certificate shall identify the Book and Page of the Public Records in which this Declaration is recorded, and shall be executed by the President or Vice President of the Association with the formalities of a deed. The amendment shall be effective when the certificate is recorded in the Public Records of Palm Beach County, Florida.

14.5 Limitation on Amendments. As long as the Developer holds title to any Parcel or property in The Fields, no amendment adopted by the Members shall be effective without the prior written consent and joinder of the Developer, which consent may be denied in the Developer's discretion. In addition, no amendment shall be effective which alters the rights and privileges of the Developer, a Builder, an Institutional Mortgagee, SFWMD, any governmental authority, taxing district, the CDD or a public or private utility, unless such party shall first provide its written consent and joinder. Any amendment proposed to the Governing Documents which would affect the Surface Water Management System, and any other conservation or mitigation areas shall be submitted to SFWMD and Palm Beach County for a determination of whether the amendment necessitates a modification of the SFWMD permit. If a modification is necessary, SFWMD will so advise the permittee. Any amendment to any of the provisions governing the following shall also require approval of fifty-one percent (51%) of the Eligible Mortgage Holders holding mortgages on Parcels in The Fields: hazard or fidelity insurance requirements; restoration or repair of any Common Area (after damage or partial condemnation) in a manner other than

that specified in this Declaration; and any provisions that expressly benefit mortgage holders, insurers or guarantors. An "Eligible Mortgage Holder" is an Institutional Mortgagee that provides a written request to the Association to be considered an Eligible Mortgage Holder (such request to state the name and address of such holder, insurer, or guarantor and the Parcel). An Eligible Mortgage Holder will be entitled to timely written notice of: any condemnation loss or any casualty loss which affects a material portion of The Fields or which affects any Parcel on which there is an Institutional Mortgage held, insured, or guaranteed by such Eligible Mortgage Holder; any delinquency in the payment of Assessments or charges owed by an Owner of a Parcel subject to the mortgage of such eligible holder, where such delinquency has continued for a period of sixty (60) days, provided, however, notwithstanding this provision, any Institutional Mortgagee, upon request, is entitled to written notice from the Association of any default in the performance by an Owner of a Parcel of any obligation under the Governing Documents which is not cured within sixty (60) days; any lapse, cancellation, or material modification of any insurance policy maintained by the Association; any proposed action which would require the consent of a specified percentage of Eligible Mortgage Holders; or any "material amendments" and "extraordinary actions", as such terms are defined in applicable requirements of the Veterans Administration. A majority of Institutional Mortgagees may demand that the Association retain professional management and obtain an audit of the Association's financial records. No amendment shall materially or adversely alter the proportionate Voting Interest appurtenant to a Parcel or increase the proportion or percentage by which a Parcel shares in the liability for Assessments unless the Owner and all record owners of liens on the Parcels join in the execution of the amendment. A change in the quorum requirement is not an alteration of Voting Interests. No amendment shall convert a Parcel into Common Area or redefine a Parcel's boundaries unless the Association obtains the prior written consent and joinder, in recordable form, of that Owner and all holders of a lien against that Parcel.

14.6 Developer Amendment of Documents. Prior to the Turnover Date, in addition to any other right of amendment or modification provided for in this Declaration, to the extent permitted by law, the Developer, or any entity which succeeds to its position as the Developer of The Fields, may, in its sole discretion, by an instrument filed of record, unilaterally modify, enlarge, amend, waive or add to the provisions of this Declaration or any of its recorded exhibits. Any amendment made pursuant to this paragraph may be made without notice to the Members or to any other entity. Annexation of additional real property and subjecting same to this Declaration, dedication of Common Area to the Association, and amendments to this Declaration may require HUD/VA approval as long as there is a Class "B" membership.

15. TURNOVER. Members other than the Developer are entitled to elect one (1) Director pursuant to Section 720.307(2) of the Act (i.e. when fifty percent (50%) of all Parcels in The Fields that ultimately will be operated by the Association have been conveyed to Members other than the Developer). Members other than the Developer are entitled to elect a majority of the Board of Directors three (3) months after ninety percent (90%) of all Parcels in The Fields that ultimately will be operated by the Association have been conveyed to Members. For purposes of this Section, the term "Members other than the Developer" shall not include Builders. Pursuant to Section 720.307 of the Act, the Developer shall be entitled to elect (appoint) at least one (1) member of the Board of Directors as long as the Developer holds for sale in the ordinary course of business at least five percent (5%) of the Parcels in all phases of The Fields. The Developer may turn over control of the Board of Directors prior to the Turnover Meeting by causing all of its appointed Directors to resign, whereupon it shall be the affirmative obligation of Members other than the Developer and Builders to elect Directors and assume control of the Association, provided that the Developer has provided at least thirty (30) days' notice to the Members.

16. GENERAL PROVISIONS.

16.1 Waiver. Any waiver by the Developer of the breach of any provisions of this Declaration must be in writing and shall not operate or be construed as a waiver of any other provision or of any subsequent breach.

16.2 Severability. If any section, subsection, sentence, clause, phrase or portion of this Declaration or any of its recorded exhibits is, for any reason, held invalid or unconstitutional by any court of competent jurisdiction, such portion shall be deemed a separate, distinct and independent provision and shall not affect the validity of the remaining portions.

16.3 Headings. The headings of the Sections herein are for convenience only, and shall not affect the meaning or interpretation of the contents thereof.

16.4 Notices. Any notice required to be sent to any Owner other than the Developer under the provisions of this Declaration or the Bylaws, shall be deemed to have been properly sent when mailed, postpaid, to the last known address of the person who appears as Owner on the records of the Association at the time of such mailing. The Owner bears the responsibility for notifying the Association of any change of address. Any notice sent to the Developer shall be sent by certified or registered mail, return receipt requested to DiVosta Homes, L.P. Attn: David Kanarek, 4400 PGA Blvd., Suite 700, Palm Beach Gardens, Florida 33410.

16.5 Interpretation. The Board of Directors is responsible for interpreting the provisions of this Declaration and its exhibits. Such interpretation shall be binding upon all parties unless wholly unreasonable.

[remainder of page intentionally left blank]

IN WITNESS WHEREOF, the Developer does hereby execute this Declaration of Covenants, Conditions and Restrictions through its undersigned, duly authorized officer on the day and year set forth below.

DIVOSTA HOMES, L.P., a Delaware limited partnership

By: DiVosta Homes Holdings, LLC, a Delaware limited liability company, its general partner

WITNESSES:

_____
Witness Name:_____

_____
Witness Name:_____

By:_____
Name: _____
Its: _____

STATE OF FLORIDA)
COUNTY OF PALM BEACH)

The foregoing instrument was acknowledged before me this ___ day of _____, 2017, by _____, as _____, of DiVosta Homes Holdings, LLC, general partner of DiVosta Homes, L.P., on behalf of said limited liability company and limited partnership. He is ( ) personally known to me or has produced _____ as identification and did take an oath.

(SEAL)

_____
Notary Public
Name:_____
(Type or Print)
My Commission Expires:_____

THE ASSOCIATION hereby joins in the execution of this Declaration of Covenants, Conditions and Restrictions through its undersigned, duly authorized officer on the day and year set forth below.

WITNESSES:

THE FIELDS HOMEOWNER'S ASSOCIATION, INC., a Florida nonprofit corporation

_____
Witness Name:_____

By:_____
Name: _____
Its: _____

_____
Witness Name:_____

STATE OF FLORIDA)
COUNTY OF PALM BEACH)

The foregoing instrument was acknowledged before me this ___ day of _____, 2017, by _____, as _____, of The Fields Homeowner's Association, Inc., a Florida nonprofit corporation, on behalf of said corporation. He is ( ) personally known to me or has produced _____ as identification and did take an oath.

(SEAL)

_____
Notary Public
Name:_____
(Type or Print)
My Commission Expires:_____

LIST OF EXHIBITS

Exhibit “A”	Land Subjected to Declaration
Exhibit “B”	Articles of Incorporation
Exhibit “C”	Bylaws
Exhibit “D”	SFWMD Permit

EXHIBIT "A"

LAND SUBJECT TO DECLARATION

ALL OF TRACTS 14, 19, 20, 29 AND 30, TOGETHER WITH A PORTION OF TRACTS 13, 31 AND 32, TOGETHER WITH ALL THAT PORTION OF THE 30 FOOT WIDE RIGHT-OF-WAY LYING BETWEEN SAID TRACTS 13, 14 AND 19, 20, ALL IN BLOCK 28, PALM BEACH FARMS CO. PLAT NO. 3, AS RECORDED IN PLAT BOOK 2, PAGE 45 THROUGH 54 OF THE PUBLIC RECORDS OF PALM BEACH COUNTY, FLORIDA, MORE PARTICULARLY DESCRIBED AS FOLLOWS

BEGINNING AT THE SOUTHWEST CORNER OF SAID TRACT 29; THENCE N.00°56'30"W. ALONG THE WEST LINE OF SAID TRACTS 13, 20 AND 29, A DISTANCE OF 1,960.00 FEET; THENCE N.89°03'30"E ALONG A LINE 50.00 FEET SOUTH OF (AS MEASURED AT RIGHT ANGLES TO) AND PARALLEL WITH THE NORTH LINE OF SAID TRACT 13, A DISTANCE OF 100.00 FEET; THENCE N.00°56'30"W. ALONG A LINE 100.00 FEET EAST OF (AS MEASURED AT RIGHT ANGLES TO) AND PARALLEL WITH THE WEST LINE OF SAID TRACT 13, A DISTANCE OF 50.00 FEET TO A POINT OF INTERSECTION WITH THE NORTH LINE OF SAID TRACT 13; THENCE N.89°03'30"E. ALONG THE NORTH LINE OF SAID TRACTS 13 AND 14, A DISTANCE OF 1,219.64 FEET TO THE NORTHEAST CORNER OF SAID TRACT 14; THENCE S.00°56'30"E. ALONG THE EAST LINE OF SAID TRACTS 14, 19 AND 30, A DISTANCE OF 1680.00 FEET; THENCE N.89°03'30"E. ALONG THE NORTH LINE OF THE SOUTH ONE-HALF OF SAID TRACTS 31 AND 32, A DISTANCE OF 952.25 FEET TO A POINT OF INTERSECTION WITH THE WEST RIGHT-OF-WAY LINE OF THE LAKE WORTH DRAINAGE DISTRICT E-2W CANAL, AS RECORDED IN OFFICIAL RECORD BOOK 24358, PAGE 1059 OF SAID PUBLIC RECORDS, AND THE POINT OF CURVATURE OF A NON TANGENT CURVE TO THE LEFT, OF WHICH THE RADIUS POINT LIES N.88°51'16"E., A RADIAL DISTANCE OF 11,602.25 FEET; THENCE SOUTHERLY ALONG THE ARC OF SAID RIGHT-OF-WAY LINE, THROUGH A CENTRAL ANGLE OF 01°37'48", A DISTANCE OF 330.05 FEET TO A POINT OF INTERSECTION WITH THE SOUTH LINE OF SAID TRACT 32; THENCE S.89°03'30"W. ALONG THE SOUTH LINE OF SAID TRACTS 29, 30, 31 AND 32, A DISTANCE OF 2,277.76 FEET TO THE POINT OF BEGINNING.

CONTAINING 2,962,429 SQUARE FEET/68.0080 ACRES, MORE OR LESS.

TOGETHER WITH:

ALL OF TRACTS 45 46, AND 47, TOGETHER WITH A PORTION OF TRACTS 33, 34, 35, 36 AND 48, ALL IN BLOCK 28, PALM BEACH FARMS CO. PLAT NO. 3, ACCORDING TO THE PLAT THEREOF, AS RECORDED IN PLAT BOOK 2, PAGE 45 THROUGH 54 OF THE PUBLIC RECORDS OF PALM BEACH COUNTY, FLORIDA, MORE PARTICULARLY DESCRIBED AS FOLLOWS

COMMENCING AT THE NORTHWEST CORNER OF SAID TRACT 36; THENCE S.00°56'30"E. ALONG THE WEST LINE THEREOF, A DISTANCE OF 43.56 FEET TO A POINT OF INTERSECTION WITH THE SOUTH RIGHT-OF-WAY LINE OF THE LAKE WORTH DRAINAGE DISTRICT L-13 CANAL, AS RECORDED IN OFFICIAL RECORD BOOK 6495, PAGE 761 OF SAID PUBLIC RECORDS, SAID RIGHT-OF-WAY LINE BEING 43.56 FEET SOUTH OF (AS MEASURED AT RIGHT ANGLES TO) AND PARALLEL WITH THE NORTH LINE OF SAID TRACT 36, AND THE POINT OF BEGINNING; THENCE N.89°03'30"E. ALONG SAID RIGHT-OF-WAY LINE, A DISTANCE OF 659.82 FEET TO A POINT OF INTERSECTION WITH THE EAST LINE OF SAID TRACT 36; THENCE S.00°56'30"E. ALONG THE EAST LINE OF SAID TRACT 36, AND THE SOUTH RIGHT-OF-WAY LINE OF SAID L-13 CANAL, A DISTANCE OF 2.64 FEET; THENCE N.89°03'30"E. ALONG THE SOUTH RIGHT-OF-WAY LINE OF SAID L-13 CANAL, SAID RIGHT-OF-WAY LINE BEING 46.20 FEET SOUTH OF (AS MEASURED AT RIGHT ANGLES TO) AND PARALLEL WITH THE NORTH LINE OF SAID TRACTS 33, 34 AND 35, A DISTANCE OF 1,620.63 FEET TO A POINT OF INTERSECTION WITH THE WEST RIGHT-OF-WAY LINE OF THE LAKE WORTH DRAINAGE DISTRICT E-2W CANAL, AS RECORDED IN OFFICIAL RECORD BOOK 24358, PAGE 1059 OF SAID PUBLIC RECORDS, AND THE POINT OF CURVE OF A NON TANGENT CURVE TO THE LEFT, OF WHICH THE RADIUS POINT LIES N.86°50'53"E., A RADIAL DISTANCE OF 11,602.25 FEET; THENCE SOUTHERLY ALONG THE ARC OF SAID RIGHT-OF-WAY LINE, THROUGH A CENTRAL ANGLE OF 00°40'12", A DISTANCE OF 135.66 FEET TO A POINT OF REVERSE CURVE TO THE RIGHT HAVING A RADIUS OF 7,495.75 FEET AND A CENTRAL ANGLE OF 02°48'44"; THENCE SOUTHERLY ALONG THE ARC OF SAID RIGHT-OF-WAY LINE, A DISTANCE OF 367.91 FEET; THENCE S.08°57'50"E. ALONG SAID RIGHT-OF-WAY LINE, A DISTANCE OF 111.68 FEET TO A POINT OF INTERSECTION WITH THE WEST RIGHT-OF-WAY LINE OF FLORIDA'S TURNPIKE, AS RECORDED IN ROAD PLAT BOOK 11, PAGES 54 THROUGH 59 OF SAID PUBLIC RECORDS; THENCE S.00°58'26"E., A DISTANCE OF 659.97 FEET TO A POINT OF INTERSECTION WITH THE SOUTH LINE OF SAID TRACT 48; THENCE S.89°03'30"W. ALONG THE SOUTH LINE OF SAID TRACTS 48, 47, 46 AND 45, A DISTANCE OF 2311.90 FEET TO THE SOUTHWEST CORNER OF SAID TRACT 45; THENCE N.00°56'30"W. ALONG THE WEST LINE OF SAID TRACTS 36 AND 45, A DISTANCE OF 1,276.47 FEET TO THE POINT OF BEGINNING.

CONTAINING 2,934,756 SQUARE FEET/67.3727 ACRES, MORE OR LESS.

SAID LANDS SITUATE IN PALM BEACH COUNTY, FLORIDA.
CONTAINING A TOTAL OF 5,897,185 SQUARE FEET/135.3807 ACRES MORE OR LESS.

LESS AND EXCEPT:

A PORTION OF TRACTS 13 AND 14, BLOCK 28, THE PALM BEACH FARMS COMPANY PLAT NO. 3, AS RECORDED IN PLAT BOOK 2, PAGES 45 THROUGH 54 OF THE PUBLIC RECORDS OF PALM BEACH COUNTY, FLORIDA, BEING MORE PARTICULARLY DESCRIBED AS FOLLOWS:

COMMENCING AT THE NORTHWEST CORNER OF SAID TRACT 13; THENCE N.89°03'30"E. ALONG THE NORTH LINE THEREOF, A DISTANCE OF 100.00 FEET TO THE POINT OF BEGINNING; THENCE CONTINUE N.89°03'30"E. ALONG THE NORTH LINE OF SAID TRACTS 13 AND 14, A DISTANCE OF 1,219.64 FEET TO THE NORTHEAST CORNER OF SAID TRACT 14; THENCE S.00°56'30"E ALONG THE EAST LINE OF SAID TRACT 14, A DISTANCE OF 110.00 FEET; THENCE S.89°03'30"W ALONG A LINE 110.00 FEET SOUTH OF (AS MEASURED AT RIGHT ANGLES TO) AND PARALLEL WITH THE NORTH LINE OF SAID TRACTS 13 AND 14, A DISTANCE OF 1,319.64 FEET TO A POINT OF INTERSECTION WITH THE WEST LINE OF SAID TRACT 13; THENCE N.00°56'30"W. ALONG SAID WEST LINE, A DISTANCE OF 60.00 FEET; THENCE N.89°03'30"E ALONG A LINE 50.00 FEET SOUTH OF (AS MEASURED AT RIGHT ANGLES TO) AND PARALLEL WITH THE NORTH LINE OF SAID TRACT 13, A DISTANCE OF 100.00 FEET; THENCE N.00°56'30"W. ALONG A LINE 100.00 FEET EAST OF (AS MEASURED AT RIGHT ANGLES TO) AND PARALLEL WITH THE WEST LINE OF SAID TRACT 13, A DISTANCE OF 50.00 FEET FEET THE POINT OF BEGINNING.

LANDS SITUATE IN PALM BEACH COUNTY, FLORIDA.
CONTAINING 140,160 SQUARE FEET/3.2176 ACRES MORE OR LESS.

AND LESS AND EXCEPT:

A PORTION OF TRACTS 13 AND 14, BLOCK 28, THE PALM BEACH FARMS COMPANY PLAT NO. 3, AS RECORDED IN PLAT BOOK 2, PAGES 45 THROUGH 54 OF THE PUBLIC RECORDS OF PALM BEACH COUNTY, FLORIDA, BEING MORE PARTICULARLY DESCRIBED AS FOLLOWS:

COMMENCING AT THE NORTHWEST CORNER OF SAID TRACT 13; THENCE S.00°56'30"E. ALONG THE WEST LINE THEREOF, A DISTANCE OF 110.00 FEET TO THE POINT OF BEGINNING; THENCE N.89°03'30"E. ALONG A LINE 110.00 FEET SOUTH OF (AS MEASURED AT RIGHT ANGLES TO) AND PARALLEL WITH THE NORTH LINE OF SAID TRACTS 13 AND 14, A DISTANCE OF 797.03 FEET; THENCE S.00°31'39"E., A DISTANCE OF 514.76 FEET; THENCE S.89°03'30"W., A DISTANCE OF 749.20 FEET; THENCE S.42°11'26"W., A DISTANCE OF 43.78 FEET; THENCE N.04°40'47"W., A DISTANCE OF 217.35 FEET TO A POINT OF INTERSECTION WITH THE WEST LINE OF SAID TRACT 13; THENCE N.00°56'30"W. ALONG SAID WEST LINE, A DISTANCE OF 329.82 FEET THE POINT OF BEGINNING.

LANDS SITUATE IN PALM BEACH COUNTY, FLORIDA.
CONTAINING 408,702 SQUARE FEET/9.3825 ACRES MORE OR LESS.

EXHIBIT "B"

ARTICLES OF INCORPORATION

FILED

16 AU(((H16000196907 3)))

SECRETARY OF STATE
TALLAHASSEE, FLORIDA

ARTICLES OF AMENDMENT
TO ARTICLES OF INCORPORATION OF
THE FIELDS AT GULFSTREAM POLO HOMEOWNER'S ASSOCIATION, INC.

Pursuant to Florida Statutes Sections 617.1001, 617.1002(2) and 617.1006, the undersigned hereby executes these Articles of Amendment to Articles of Incorporation to amend the Company's Articles of Incorporation, and states as follows:

1. The current name of the Company is "The Fields at Gulfstream Polo Homeowner's Association, Inc."

2. The Developer is currently the sole member of the Company, and pursuant to Florida Statutes Section 617.0701(4) adopted the following amendment to the Company's Articles of Incorporation through written consent:

Article I of the Company's Articles of Incorporation is hereby revised to change the name of the Company to "The Fields Homeowner's Association, Inc.".

IN WITNESS WHEREOF, the undersigned makes and files these Articles of Amendment to Articles of Incorporation, hereby declares and certifies the facts herein stated are true and hereunto set my hand this 5 day of August, 2016.

David Kanarek, President

David Kanarek, President

(((H16000196907 3)))

ARTICLES OF INCORPORATION

FOR

THE FIELDS AT GULFSTREAM POLO HOMEOWNERS ASSOCIATION, INC.

TABLE OF CONTENTS
FOR
ARTICLES OF INCORPORATION
OF
THE FIELDS AT GULFSTREAM POLO HOMEOWNERS ASSOCIATION, INC.

PAGE NO.

ARTICLE I 1
NAME 1

ARTICLE II 1
DEFINITIONS 1

ARTICLE III 1
PURPOSE AND POWERS 1

ARTICLE IV 2
MEMBERSHIP 2

ARTICLE V 3
TERM: 3

ARTICLE VI 3
BYLAWS 3

ARTICLE VII 3
DIRECTORS AND OFFICERS 3

ARTICLE VIII 4
AMENDMENTS 4

ARTICLE IX 4
INDEMNIFICATION 4

ARTICLE X 5
INCORPORATOR 5

ARTICLE XI 5
REGISTERED OFFICE AND REGISTERED AGENT 5

FILED
2016 MAR 18 AM 11:33
SECRETARY OF STATE
TALLAHASSEE, FLORIDA

ARTICLES OF INCORPORATION
THE FIELDS AT GULFSTREAM POLO HOMEOWNERS ASSOCIATION, INC.

Pursuant to Section 617.02011, Florida Statutes, the undersigned hereby executes these Articles of Incorporation for the purpose of forming a corporation not for profit under Chapter 617, Florida Statutes, the Florida Not-for-Profit Corporation Act.

ARTICLE I

NAME: The name of the corporation, herein called the "Association", is The Fields at Gulfstream Polo Homeowners Association, Inc., and its address is c/o Pulte Home Corporation, 24311 Walden Center Drive, Suite 300, Bonita Springs, FL 34134.

ARTICLE II

DEFINITIONS: The definitions set forth in Section 720.301 of the Act shall apply to terms used in these Articles, unless otherwise defined in the Declaration of Covenants, Conditions and Restrictions for The Fields at Gulfstream Polo ("Declaration").

ARTICLE III

PURPOSE AND POWERS: The purpose for which the Association is organized is to provide an entity pursuant to the Florida Not-for-Profit Corporation Act and the Act for the operation of a community to be known as "The Fields at Gulfstream Polo", located in Palm Beach County, Florida. The Association is organized and shall exist on a non-stock basis as a corporation not for profit under the laws of the State of Florida, and no portion of any earnings of the Association shall be distributed or inure to the private benefit of any Member, Director or officer. For the accomplishment of its purposes, the Association shall have all of the common law and statutory powers and duties of a corporation not for profit and of a homeowners' association under the laws of the State of Florida, except as expressly limited or modified by the Governing Documents; and it shall have all of the powers and duties reasonably necessary to operate The Fields at Gulfstream Polo pursuant to the Governing Documents as they may hereafter be amended, including, but not limited to the following:

(A) To make and collect Assessments against the Members to defray the costs, expenses and losses of the Association, and to use the funds in the exercise of its powers and duties.

(B) To protect, maintain, repair, replace and operate the Common Area.

(C) To purchase insurance for the protection of the Common Area, the Association and the Members.

(D) To repair and reconstruct improvements after casualty, and to make further improvements to the Common Area.

(E) To make, amend and enforce Rules and Regulations as set forth in the Governing Documents.

H16000069284 3

(F) To approve or disapprove the transfer, leasing and occupancy of Parcels to the extent provided in the Declaration.

(G) To enforce the provisions of the laws of the State of Florida that are applicable to The Fields at Gulfstream Polo and the Governing Documents.

(H) To contract for the management and maintenance of The Fields at Gulfstream Polo, and any property or easements and related improvements that are dedicated to the Association by plat or separate instrument, including any agreement or easement which imposes maintenance obligations on the Association, and to delegate any powers and duties of the Association in connection therewith except such as are specifically required by law or by the Governing Documents to be exercised by the Association's Board of Directors or the Members.

(I) To employ accountants, attorneys, architects, and other professionals to perform the services required for proper operation of The Fields at Gulfstream Polo.

(J) To borrow money as necessary to perform its other functions hereunder.

(K) To grant, modify or move any easement.

(L) To acquire, own, lease and dispose of any real and personal property.

(M) To sue and be sued.

(N) To maintain and operate the Surface Water Management System, as more particularly described in the Declaration.

All funds and the title to all property acquired by the Association shall be held for the benefit of the Members in accordance with the provisions of the Governing Documents. In the event of termination, dissolution or final liquidation of the Association, the responsibility for the operation and maintenance of the Common Area and other property the Association is obligated to maintain pursuant to the Governing Documents, including any property or easements and related improvements that are dedicated to the Association by plat or separate instrument, including any agreement or easement which imposes maintenance obligations on the Association, shall be transferred to and accepted by an entity that is acceptable to any applicable governmental authorities, prior to such termination, dissolution or liquidation. Annexation of additional properties, mergers and consolidations, mortgaging of Common Area and dissolution of the Association requires prior written approval of the Department of Housing and Urban Development and the Veterans Administration ("HUD/VA") as long as there is a Class "B" membership.

ARTICLE IV

MEMBERSHIP:

(A) The Members shall be the record owners of a fee simple interest in one or more Parcels. Class "A" Members are all owners other than the Developer. The Class "B" Member is the Developer as further provided in the Association's Bylaws.

(B) The share of a Member in the funds and assets of the Association cannot be assigned or transferred in any manner except as an appurtenance to his Parcel.

(C) Except as otherwise provided in the Association's Bylaws with respect to the Class "B" Member, the owners of each Parcel, collectively, shall be entitled to one vote in Association matters. The manner of exercising voting rights shall be as set forth in the Association's Bylaws.

ARTICLE V

TERM: The term of the Association shall be perpetual.

ARTICLE VI

BYLAWS: The Association's Bylaws may be altered, amended, or rescinded in the manner provided therein.

ARTICLE VII

DIRECTORS AND OFFICERS:

(A) The affairs of the Association shall be administered by a Board of Directors consisting of the number of Directors determined by the Association's Bylaws, but not less than three (3) Directors, and in the absence of such determination shall consist of three (3) Directors.

(B) Directors of the Association shall initially be appointed by and shall serve at the pleasure of the Developer, and on and following the Turnover Date, the Board of Directors shall be elected by the Members in the manner determined by the Association's Bylaws. Directors may be removed and vacancies on the Board of Directors shall be filled in the manner provided by the Association's Bylaws.

(C) The business of the Association shall be conducted by the officers designated in the Association's Bylaws. The officers shall be elected each year by the Board of Directors at its first meeting after the annual meeting of the Members, and they shall serve at the pleasure of the Board of Directors. The initial Directors are as follows:

David Kanarek
c/o Pulte Home Corporation
24311 Walden Center Drive, Suite 300
Bonita Springs, FL 34134

Gregory Pettibon
c/o Pulte Home Corporation
24311 Walden Center Drive, Suite 300
Bonita Springs, FL 34134

Andrew Maxey
c/o Pulte Home Corporation
24311 Walden Center Drive, Suite 300
Bonita Springs, FL 34134

The initial Officers are as follows: David Kanarek, President; Gregory Pettibon, Vice President; and Andrew Maxey, Secretary/Treasurer.

ARTICLE VIII

AMENDMENTS: Amendments to these Articles shall be proposed and adopted in the following manner:

(A) Proposal. Subsequent to the Turnover Date, amendments to these Articles may be proposed by the Board of Directors or by a written petition to the Board of Directors, signed by at least one-fourth (1/4) of the Voting Interests.

(B) Procedure. Upon any amendment to these Articles being proposed by said Board of Directors or Members, such proposed amendment shall be submitted to a vote of the Members not later than the next annual meeting for which proper notice can be given.

(C) Vote Required. Prior to the Turnover Date, amendments shall be adopted by the Developer. Subsequent to the Turnover Date, a proposed amendment shall be adopted if it is approved by at least two-thirds (2/3) of the Voting Interests, at any annual or special meeting. As long as the Developer owns a Parcel, an amendment to these Articles shall not be effective without the prior written consent of the Developer, which consent may be denied in the Developer's discretion, provided, further, that regardless of whether the Developer owns a Parcel, no amendment shall be effective if it affects the Developer's rights or alters any provision made for the Developer's benefit. Amendment of these Articles requires prior written approval of HUD/VA as long as there is a Class "B" membership.

(D) Effective Date. An amendment shall become effective upon filing Articles of Amendment with the Florida Department of State and recording a Certificate of Amendment in the Public Records of Palm Beach County, Florida, with the formalities required for the execution of a deed.

ARTICLE IX

INDEMNIFICATION: To the fullest extent permitted by Florida law, the Association shall indemnify and hold harmless every Director and every officer of the Association against all expenses and liabilities, including attorneys' fees, actually and reasonably incurred by or imposed on him in connection with any legal proceeding (or settlement or appeal of such proceeding) to which he may be a party because of his being or having been a Director or officer of the Association. The foregoing right of indemnification shall not be available if a judgment or other final adjudication establishes that his actions or omissions to act were material to the cause adjudicated and involved:

(A) Willful misconduct or a conscious disregard for the best interests of the Association, in a proceeding by or in the right of the Association to procure a judgment in its favor.

(B) A violation of criminal law, unless the Director or officer had no reasonable cause to believe his action was unlawful or had reasonable cause to believe his action was lawful.

(C) A transaction from which the Director or officer derived an improper personal benefit.

In the event of a settlement, the right to indemnification shall not apply unless the Board of Directors approves such settlement as being in the best interest of the Association. The foregoing rights of indemnification shall be in addition to and not exclusive of all other rights to which a Director or officer may be entitled.

ARTICLE X

INCORPORATOR: The name and address of the Incorporator is as follows:

David Kanarek
c/o Pulte Home Corporation
24311 Walden Center Drive, Suite 300
Bonita Springs, FL 34134

ARTICLE XI

REGISTERED OFFICE AND REGISTERED AGENT: The name and address of the Registered Agent and the address of the Registered Office is:

David Kanarek
c/o Pulte Home Corporation
24311 Walden Center Drive, Suite 300
Bonita Springs, FL 34134

IN WITNESS WHEREOF, the undersigned, for the purpose of forming a corporation not for profit to do business in the State of Florida, under the laws of Florida, makes and files these Articles of Incorporation, hereby declares and certifies the facts herein stated are true and hereunto set my hand this 16 day of March, 2016.

David Kanarek, Incorporator

CERTIFICATE OF DESIGNATION
REGISTERED AGENT/REGISTERED OFFICE

Pursuant to the provisions of Section 617.0501, Florida Statutes, the undersigned corporation, organized under the laws of the State of Florida, submits the following statement in designating the registered office/registered agent, in the State of Florida.

FILED
2016 MAR 18 AM 11:33
SECRETARY OF STATE
TALLAHASSEE, FLORIDA

1. The name of the corporation is:

THE FIELDS AT GULFSTREAM POLO HOMEOWNERS ASSOCIATION, INC.

2. The name and address of the registered agent and office is:

David Kanarek
c/o Pulte Home Corporation
24311 Walden Center Drive, Suite 300
Bonita Springs, FL 34134

David Kanarek, President

DATE: 3/16/2016

HAVING BEEN NAMED AS REGISTERED AGENT AND TO ACCEPT SERVICE OF PROCESS FOR THE ABOVE STATED CORPORATION AT THE PLACE DESIGNATED IN THIS CERTIFICATE, I HEREBY ACCEPT THE APPOINTMENT AS REGISTERED AGENT AND AGREE TO ACT IN THIS CAPACITY. I FURTHER AGREE TO COMPLY WITH THE PROVISIONS OF ALL STATUTES RELATING TO THE PROPER AND COMPLETE PERFORMANCE OF MY DUTIES, AND I AM FAMILIAR WITH AND ACCEPT THE OBLIGATIONS OF MY POSITION AS REGISTERED AGENT.

David Kanarek

DATE: 3/16/2016

EXHIBIT "C"

BYLAWS

BYLAWS

FOR

THE FIELDS HOMEOWNER'S ASSOCIATION, INC.

TABLE OF CONTENTS
FOR
BYLAWS
OF
THE FIELDS HOMEOWNER'S ASSOCIATION, INC.

PAGE NO.

1. GENERAL 1
   1.1 Principal Office 1
   1.2 Seal 1
   1.3 Definitions 1
2. MEMBERS 1
   2.1 Qualifications 1
   2.2 Voting Interest 1
   2.3 Approval or Disapproval of Matters 2
   2.4 Change of Membership 2
   2.5 Termination of Membership 2
3. MEMBERS' MEETINGS: VOTING 2
   3.1 Annual Meeting 2
   3.2 Special Members' Meetings 2
   3.3 Notice of Meetings; Waiver of Notice 2
   3.4 Quorum 3
   3.5 Vote Required 3
   3.6 Proxy Voting 3
   3.7 Adjourned Meetings 3
   3.8 Order of Business 3
   3.9 Minutes 4
   3.10 Parliamentary Rules 4
4. BOARD OF DIRECTORS 4
   4.1 Number and Terms of Service; Elections 4
   4.2 Qualifications 5
   4.3 Vacancies on the Board of Directors 6
   4.4 Removal of Directors 6
   4.5 Organizational Meeting 6
   4.6 Other Meetings 6
   4.7 Notice to Owners 7
   4.8 Waiver of Notice 7
   4.9 Quorum of Directors 7
   4.10 Vote Required 7
   4.11 Adjourned Meetings 7
   4.12 The Presiding Officer 7
   4.13 Compensation of Directors and Officers 7
   4.14 Committees 7
5. OFFICERS 8
   5.1 Officers and Elections 8
   5.2 President 8
   5.3 Vice-Presidents 8
   5.4 Secretary 8
   5.5 Treasurer 8

6. FISCAL MATTERS 9
6.1 Depository 9
6.2 Budget 9
6.3 Reserves for Capital Expenditures and Deferred Maintenance 9
6.4 Assessments 9
6.5 Special Assessments 9
6.6 Fidelity Bonds 10
6.7 Financial Reporting 10
6.8 Fiscal Year 10
7. RULES AND REGULATIONS: USE RESTRICTIONS 10
8. COMPLIANCE AND DEFAULT: REMEDIES 11
8.1 Obligations of Members; Remedies At Law Or In Equity; Levy of Fines and Suspension Of Use Rights 11
8.2 Availability of Remedies 12
9. AMENDMENT OF BYLAWS 12
9.1 Proposal 12
9.2 Procedure 12
9.3 Vote Required 12
9.4 Certificate; Recording 13
10. MISCELLANEOUS 13
10.1 Gender 13
10.2 Severability 13

BYLAWS

THE FIELDS HOMEOWNER'S ASSOCIATION, INC.

1. GENERAL: These are the Bylaws of The Fields Homeowner's Association, Inc., hereinafter the "Association", a corporation not for profit organized under the laws of Florida for the purpose of operating The Fields pursuant to the Florida Not-For-Profit Corporation Act.

1.1. Principal Office. The principal office of the Association is c/o DiVosta Homes, L.P., 24311 Walden Center Drive, Suite 300, Bonita Springs, FL 34134.

1.2. Seal. The seal of the Association shall be inscribed with the name of the Association, the year of its organization, and the words "Florida" and "not-for-profit". The seal may be used by causing it, or a facsimile of it, to be impressed, affixed, reproduced or otherwise placed upon any document or writing of the corporation where a seal may be required.

1.3. Definitions. The definitions set forth in the Declaration and the Act shall apply to terms used in these Bylaws.

2. MEMBERS:

2.1. Qualifications. The Members shall be the record owners of legal title to the Parcels in The Fields. In the case of a Parcel subject to an agreement for deed, the purchaser in possession shall be deemed the Owner of the Parcel for purposes of determining voting and use rights. Membership shall become effective upon the last to occur of the following:

(A) Recording a deed or other instrument evidencing legal title to the Parcel in the Public Records of Palm Beach County, Florida.

(B) Delivery to the Association of a copy of the recorded deed or other instrument evidencing title.

(C) Delivery to the Association, if required, of a written designation of the Primary Occupants.

The failure to comply with the prerequisites set forth in (B)-(C) above shall not release the Member from the obligation to comply with the Governing Documents, but shall otherwise preclude such Member from obtaining the benefits of membership, including, without limitation, the right to receive notices and the right to vote on Association matters.

2.2. Voting Interest. The Class "A" Members are entitled to one (1) vote for each Parcel they own. The total number of Class "A" votes shall not exceed the total number of Parcels subject to the Declaration. The Class "B" Member shall be entitled to a number of votes equal to the total number of Parcels owned by the Class "A" Members plus one (1) vote; provided that subsequent to the Turnover Date, the Class "B" Member shall be entitled to one (1) vote for each Parcel it owns. The vote of a Parcel is not divisible. If a Parcel is owned by one (1) natural person, his right to vote shall be established by the record title to the Parcel. If a Parcel is owned jointly by two (2) or more natural persons that are not acting as trustees, that Parcel's vote may be cast by any one (1) of the Owners. If two (2) or more Owners do not agree among themselves how their one (1) vote shall be cast, that vote shall not be counted for any purpose. If the Owner is a corporation, partnership, limited liability company, trust, trustee or other entity other than a

natural person, the vote of that Parcel shall be cast by any officer, director, partner, manager, managing member or trustee, as the case may be.

2.3. Approval or Disapproval of Matters. Whenever the decision or approval of the Owner of a Parcel is required upon any matter, whether or not the subject of an Association meeting, such decision or approval may be expressed by any person authorized to cast the vote of such Parcel at an Association meeting as stated in Section 2.2 above, unless the joinder of all Owners is specifically required.

2.4. Change of Membership. A change of membership shall be established as provided in Section 2.1 above; and the membership of the prior Owner shall thereby be automatically terminated.

2.5. Termination of Membership. The termination of membership in the Association does not relieve or release any former Member from liability or obligation incurred under or in any way connected with the Association during the period of his membership, nor does it impair any rights or remedies which the Association may have against any former Owner or Member arising out of or in any way connected with such ownership and membership and the covenants and obligations incident thereto.

3. MEMBERS' MEETINGS: VOTING:

3.1. Annual Meeting. There shall be an Annual meeting of the Members in each calendar year. The Annual meeting shall be held in Palm Beach County, Florida, each year at a day, place and time designated by the Board of Directors, for the purpose of electing Directors and transacting any business duly authorized to be transacted by the Members.

3.2. Special Members' Meetings. Prior to the Turnover Date, Special Members' meetings must be held whenever called by the President or by a majority of the Directors. Subsequent to the Turnover Date, Special Members' meetings must be held whenever called by the President or by a majority of the Directors, and may also be called by Members having at least twenty-five percent (25%) of the Voting Interests. The business at any Special Members' meeting shall be limited to the items specified in the notice of meeting.

3.3. Notice of Meetings; Waiver of Notice. Notice of all Members' meetings must state the time, date, and place of the meeting, and include an agenda for the meeting. The Notice of Meeting must be sent to each Member at the address which appears on the books of the Association, or may be furnished by personal delivery. The Member is responsible for providing the Association with notice of any change of address. The Notice of Meeting must be mailed, delivered or electronically transmitted at least fourteen (14) days before the meeting. An affidavit of the officer or other person making such mailing shall be retained in the Association records as proof of mailing. Attendance at any meeting by a Member constitutes waiver of notice by that Member unless the Member objects to the lack of notice at the beginning of the meeting. A Member may waive notice of any meeting at any time, but only by written waiver. Notice to the Members of meetings of the Board of Directors, meetings of a committee requiring notice in the same manner as meetings of the Board of Directors, and Annual and Special meetings of the Members, may be electronically transmitted in the manner set forth in Section 617.0141, F.S. (except as limited by the Act and these Bylaws). Notice by electronic transmission is effective: when actually transmitted by facsimile telecommunication, if correctly directed to a number at which the Member has consented to receive notice; when actually transmitted by electronic mail, if correctly directed to an electronic mail address at which the Member has consented to receive notice. Notice is also effective when posted on an electronic network that the Member has consented to consult, upon the later of: such correct posting; or the giving of a separate notice to the Member of the fact of such specific posting; or when correctly transmitted to the Member, if by any other form of electronic transmission consented to by the Member to whom notice is given. Consent by a Member to receive notice by electronic transmission shall be revocable by the Member by written notice

to the Association. Any such consent shall be deemed revoked if: the Association is unable to deliver by electronic transmission two (2) consecutive notices given by the Association in accordance with such consent; and such inability becomes known to the Secretary, Assistant Secretary or other authorized person responsible for the giving of notice. However, the inadvertent failure to treat such inability as a revocation does not invalidate any meeting or other action. The Member is responsible for providing the Association with notice of any change of mailing address, facsimile number or electronic mail address. As used in these Bylaws, the term "electronic transmission" means any form of communication, not directly involving the physical transmission or transfer of paper, which creates a record that may be retained, retrieved, and reviewed by a recipient thereof and which may be directly reproduced in a comprehensible and legible paper form by such recipient through an automated process. Examples of electronic transmission include, but are not limited to, telegrams, facsimile transmission of images, and text that is sent via electronic mail between computers. An affidavit of the Secretary, an Assistant Secretary, or other authorized agent of the Association that the notice has been given by a form of electronic transmission is, in the absence of fraud, prima facie evidence of the facts stated in the notice.

3.4. Quorum. A quorum at a Members' meeting shall be attained by the presence, either in person or by proxy, of Members entitled to cast at least thirty percent (30%) of the Voting Interests. After a quorum has been established at a Members' meeting, the subsequent withdrawal of any Members, so as to reduce the number of Voting Interests represented below the number required for a quorum, shall not affect the validity of any action taken at the meeting before or after such persons leave.

3.5. Vote Required. The acts approved by a majority of the votes cast at a duly called meeting of the Members at which a quorum has been attained shall be binding upon all Members for all purposes, except where a greater or different number of votes are expressly required by law or by any provision of the Governing Documents. The Association may conduct elections and other membership votes through an internet-based online voting system if a Member consents, in writing, to online voting and all requirements in Section 720.317 of the Act are met.

3.6. Proxy Voting. To the extent lawful, any Member entitled to attend and vote at a Members meeting may establish his presence and cast his vote by proxy. A proxy shall be valid only for the specific meeting for which originally given and any lawful adjournment of that meeting, and no proxy is valid for a period longer than ninety (90) days after the date of the first meeting for which it was given. Every proxy shall be revocable at the pleasure of the person executing it. To be valid, a proxy must be in writing, dated, signed by the person authorized to cast the votes, specify the date, time and place of the meeting for which it is given, and delivered to the Association by the appointed time of the meeting or adjournment thereof. Holders of proxies need not be Members. No proxy shall be valid if it names more than one (1) person as the holder of the proxy, but the holder shall have the right, if the proxy so provides, to substitute another person to hold the proxy.

3.7. Adjourned Meetings. Any duly called meeting of the Members may be adjourned to be reconvened at a specific later time by vote of the majority of the Voting Interests present in person or by proxy, regardless of whether a quorum has been attained. The adjournment to a date, time and place must be announced at that meeting before the adjournment is taken, or notice must be given to all Members of the date, time and place of its reconvening. Any business which might have been conducted at the meeting as originally scheduled may instead be conducted at the continuance, provided a quorum is then present, in person or by proxy.

3.8. Order of Business. The order of business at Members' meetings shall be substantially as follows:

(A) Call of the roll or determination of quorum
(B) Reading or disposal of minutes of the last Members' meeting
(C) Reports of Officers
(D) Reports of Committees
(E) Unfinished Business
(F) New Business
(G) Adjournment

3.9. Minutes. Minutes of all meetings of Members and of the Board of Directors shall be kept in a businesslike manner and available for inspection by Members or their authorized representatives and Directors at reasonable times and for a period of seven (7) years after the meeting. Minutes must be maintained in written form or in another form that can be converted into written form within a reasonable time. A vote or abstention from voting on each matter voted upon for each Director present at a Board of Directors meeting must be recorded in the minutes.

3.10. Parliamentary Rules. Roberts' Rules of Order (latest edition) shall guide the conduct of Association meetings when not in conflict with the law, with the Declaration, or with these Bylaws. The presiding officer may appoint a Parliamentarian whose decision on questions of parliamentary procedure shall be final. Any question or point of order not raised at the meeting to which it relates shall be deemed waived.

4. BOARD OF DIRECTORS: The administration of the affairs of the Association shall be by the Board of Directors. All powers and duties granted to the Association by law, as modified and explained in the Governing Documents, shall be exercised by the Board of Directors, subject to approval or consent of the Members only when such is specifically required.

4.1. Number and Terms of Service; Elections. The number of Directors which shall constitute the whole Board of Directors shall initially be three (3), all of whom shall be appointed by and shall serve at the pleasure of the Developer. At the Annual meeting occurring subsequent to the date that Members other than the Developer are entitled to elect one (1) Director pursuant to Section 720.307(2) of the Act (i.e. when fifty percent (50%) of all Parcels in The Fields that ultimately will be operated by the Association have been conveyed to Members other than the Developer), there shall be four (4) Directors, three (3) of whom shall be appointed by and serve at the pleasure of the Developer and the fourth elected by the Members other than the Developer. For purposes of this Section, the term "Members other than the Developer" shall not include Builders. The number of Directors shall increase to five (5) at the Turnover Meeting. Directors shall be elected by secret ballot (using a double envelope system) in accordance with the Act and these Bylaws at: the Annual Meeting occurring subsequent to the date that Members other than the Developer are entitled to elect one (1) Director pursuant to Section 720.307(2) of the Act; any other Annual Meeting prior to the Turnover Meeting; and at subsequent Annual Meetings.

The First Notice of the Turnover or Annual Meeting, as the case may be, shall be mailed, hand-delivered or electronically transmitted to all Members at least sixty (60) days in advance of the meeting. Any person who wishes to qualify as a candidate shall notify the Association in writing of his or her desire to be a candidate at least forty (40) days prior to the meeting and must be eligible to serve on the Board of Directors at the time of such forty (40) day deadline in order to have his or her name listed as a proper candidate on the election ballot or to serve on the Board of Directors. Notice shall be deemed effective when received by the Association. Any person indicating his or her desire to qualify as a candidate may also return a separate information sheet, no larger than 8 ½" by 11", which describes the candidate's background, education and qualifications for office, and any other information deemed relevant by the candidate, which information sheet must be furnished by the candidate at least forty (40) days prior to the

election. The Association has no liability for the contents of the information sheets prepared by the candidates.

If the number of candidates does not exceed the number of vacancies, an election shall not be required. The Association shall mail, hand-deliver or electronically transmit a Second Notice at least fourteen (14) days in advance of the meeting. The candidates shall become members of the Board of Directors effective upon the adjournment of the meeting.

If the number of candidates exceeds the number of seats to be filled, an election shall be required. The Association shall mail, hand-deliver or electronically transmit a Second Notice, together with any candidate information sheets, a ballot which shall list all candidates in alphabetical order by surname, and (unless the Second Notice is electronically transmitted), "inner" and "outer envelopes", at least fourteen (14) days in advance of the meeting. Directors shall be elected by a plurality of the ballots cast. A Member shall not permit any other person to vote his ballot, and any ballots improperly cast are invalid. In the election of Directors, there shall be appurtenant to each Parcel as many votes for Directors as there are Directors to be elected, but no Parcel may cast more than one (1) vote for any candidate, it being the intent hereof that voting for Directors shall be non-cumulative.

After indicating the name(s) of the candidate(s) for which the Member has voted, the ballot must be placed in an inner envelope with no identifying markings and mailed or delivered to the Association in an outer envelope bearing identifying information reflecting the name of the Member, the Member's address in The Fields and the signature of the Member casting that ballot. If the eligibility of the Member to vote is confirmed and no other ballot has been submitted for that Parcel, the inner envelope shall be removed from the outer envelope bearing the identification information, placed with the ballots which were personally cast, and opened when the ballots are counted. Nominations from the floor are prohibited and there shall not be a nominating committee. If more than one (1) ballot is submitted for a Parcel, the ballots for that Parcel shall be disqualified. Upon receipt by the Association, no ballot may be rescinded or changed. Any vote by ballot received after the closing of the balloting may not be considered.

At the Turnover Meeting, the three (3) Directors who receive the highest number of votes shall be elected to two (2) year terms, and the remaining two (2) Directors elected shall serve an initial one (1) year term. In the event of a tie vote, or if the number of candidates does not exceed the number of seats to be filled, the candidates shall mutually agree or shall draw lots to determine which candidate(s) shall serve and for what terms. Thereafter, all Directors (except those appointed by the Developer) shall serve two (2) year terms. Notwithstanding the foregoing provisions in this Section 4.1, the Developer shall be entitled to appoint at least one (1) member of the Board of Directors as long as the Developer holds for sale in the ordinary course of business at least five percent (5%) of the Parcels in all phases of The Fields. A Director's term will end at the annual election at which his successor is to be duly elected, unless he sooner resigns, or is recalled as provided in 4.4 below.

4.2. Qualifications. Directors appointed by the Developer are not required to be Members. Directors appointed by the Developer may be the Developer's officers or employees. Directors elected by the Members must be a Member or the spouse of a Member. If a Parcel is owned by a corporation, partnership, limited liability company or trust, any officer, director, partner, manager, managing member, or trustee, as the case may be, shall be eligible to serve as a Director. A person who is delinquent in the payment of any fee, fine or other monetary obligation to the Association on the day that he or she could last nominate himself or herself or be nominated for the Board of Directors may not seek election to the Board of Directors , and his or her name shall not be listed on the ballot. A person serving as a Director who becomes more than ninety (90) days delinquent in the payment of any fee, fine or other monetary obligation to the Association shall be deemed to have abandoned his or her seat on the Board of Directors, creating a vacancy on the Board of Directors to be filled according to law. For purposes of this Section 4.2, the term

"any fee, fine or other monetary obligation" means any delinquency to the Association with respect to any Parcel. A person who has been convicted of any felony in Florida or in a United States District or Territorial Court, or has been convicted of any offense in another jurisdiction which would be considered a felony if committed in Florida, may not seek election to the Board of Directors and is not eligible for Board membership unless such felon's civil rights have been restored for at least five (5) years as of the date on which such person seeks election to the Board of Directors. The validity of any action by the Board of Directors is not affected if it is later determined that a person was ineligible to seek election to the Board of Directors or that a Director is ineligible for Board of Directors membership. A Director or officer charged by information or indictment with a felony theft or embezzlement offense involving the Association's funds or property is removed from office. The Board of Directors shall fill the vacancy according to general law until the end of the period of the suspension or the end of the Director's term of office, whichever occurs first. However, if the charges are resolved without a finding of guilt or without acceptance of a plea of guilty or nolo contendere, the Director or officer shall be reinstated for any remainder of his or her term of office. A Member who has such criminal charges pending may not be appointed or elected to a position as a Director or officer. Within ninety (90) days after being elected or appointed to the Board of Directors, each Director shall certify in writing to the Secretary that he or she has read the Declaration, Articles of Incorporation, Bylaws and current written rules and policies; that he or she will work to uphold such documents and policies to the best of his or her ability; and that he or she will faithfully discharge his or her fiduciary responsibility to the Members. Within ninety (90) days after being elected or appointed to the Board of Directors, in lieu of such written certification, the newly elected or appointed Director may submit a certificate of having satisfactorily completed the educational curriculum administered by a Division-approved education provider within one year before or ninety (90) days after the date of election or appointment. The written certification or educational certificate is valid for the uninterrupted tenure of the Director on the Board of Directors. A Director who does not timely file the written certification or educational certificate shall be suspended from the Board of Directors until he or she complies with the requirements set forth above. The Board of Directors may temporarily fill the vacancy during the period of suspension. The Association shall retain each Director's written certification or educational certificate for inspection by the Members for five (5) years after the Director's election. However, the failure to have such written certification or educational certificate on file does not affect the validity of any Board of Directors' action.

4.3. Vacancies on the Board of Directors. If the office of any Director becomes vacant for any reason, other than recall by the membership at a Members' meeting, a majority of the remaining Directors, though less than a quorum, shall promptly choose a successor to fill the remaining unexpired term except that vacancies of all Directors appointed by the Developer shall likewise be filled by the Developer. If the Association fails to fill vacancies on the Board of Directors sufficient to constitute a quorum, or if no Director remains on the Board of Directors, the vacancy may be filled by the Members (via a special meeting of the Members) or any Member may apply to the Circuit Court for the appointment of a receiver to manage the Association's affairs, in the manner provided by Florida law.

4.4. Removal of Directors. Except for Directors appointed by the Developer, any or all Directors may be removed with or without cause by a majority the Voting Interests, either by a written petition, or at any meeting called for that purpose, in the manner required by Section 720.303(10) of the Act.

4.5. Organizational Meeting. The organizational meeting of a new Board of Directors shall be held within ten (10) days after the election. The organizational meeting may be held immediately following the election, in which case noticing of the meeting may be effectuated by the Board of Directors existing prior to the election.

4.6. Other Meetings. Meetings of the Board of Directors may be held at such time and place in Palm Beach County, Florida, as shall be determined from time to time by the President or a majority of the

Directors. Notice of meetings shall be given to each Director, personally or by mail, telephone or telegram at least forty-eight (48) hours prior to the day named for such meeting.

4.7. Notice to Owners. A meeting of the Board of Directors occurs whenever a quorum of the Board of Directors gathers to conduct Association business. All meetings of the Board of Directors shall be open to Members except for meetings between the Board of Directors and its attorney with respect to proposed or pending litigation where the contents of the discussion would otherwise be governed by the attorney-client privilege; or meetings of the Board of Directors held for the purpose of discussing personnel matters. Notices of all Board of Directors meetings shall be posted conspicuously in The Fields for at least forty-eight (48) continuous hours in advance of each Board of Directors meeting, except in an emergency. In the event of an emergency meeting, any action taken shall be noticed and ratified at the next regular meeting of the Board of Directors. In the alternative to the posting requirements discussed above, notice of each Board of Directors meeting must be mailed or delivered to each Member at least seven (7) days before the meeting, except in an emergency. An Assessment may not be levied at a Board of Directors meeting unless the notice of the meeting includes a statement that Assessments will be considered and the nature of the Assessments. Members have the right to speak with reference to any matter that is placed on the Board of Directors meeting agenda. The Association may adopt reasonable, written rules expanding the rights of Members to speak and governing the frequency, duration, and other manner of Member statements, (including a sign-up sheet requirement), which rules must be consistent with the minimum requirements of the Act.

4.8. Waiver of Notice. Any Director may waive notice of a meeting before or after the meeting, and such waiver shall be deemed equivalent to the giving of notice. If all Directors are present at a meeting, no notice to Directors shall be required.

4.9. Quorum of Directors. A quorum at a Board of Directors meeting shall exist when at least a majority of all Directors are present at a duly called meeting. Directors may participate in any meeting of the Board of Directors, by a conference telephone call or similar communicative arrangement whereby all persons present can hear all other persons. Participation by such means shall be deemed equivalent to presence in person at a meeting.

4.10. Vote Required. The acts approved by a majority of those Directors present and voting at a meeting at which a quorum exists shall constitute the acts of the Board of Directors, except when approval by a greater number of Directors is required by the Governing Documents or by applicable statutes. Directors may not vote by proxy or by secret ballot at Board of Directors meetings, except that secret ballots may be used in the election of officers.

4.11. Adjourned Meetings. The majority of the Directors present at any meeting of the Board of Directors, regardless of whether a quorum exists, may adjourn the meeting to be reconvened at a specific time and date.

4.12. The Presiding Officer. The President of the Association, or in his absence, the Vice-President, shall be the presiding officer at all meetings of the Board of Directors. If neither is present, the presiding officer shall be selected by majority vote of the Directors present.

4.13. Compensation of Directors and Officers. Neither Directors nor officers shall receive compensation for their services as such. Directors and officers may be reimbursed for all actual and proper out-of-pocket expenses relating to the proper discharge of their respective duties.

4.14. Committees. The Board of Directors may appoint from time to time such standing or temporary committees as the Board of Directors deem necessary and convenient for the efficient and

effective operation of the Association. Any such committee shall have the powers and duties assigned to it in the resolution creating the committee. If required by law, committee meetings shall be open to attendance by any Member, and notice of committee meetings shall be posted in the same manner as required in Section 4.7 above for Board of Directors meetings, except for such committee meetings between the committee and its attorney with respect to proposed or pending litigation where the contents of the discussion would otherwise be governed by the attorney-client privilege.

5. OFFICERS:

5.1. Officers and Elections. The executive officers of the Association shall be a President and Vice President (both of whom must be Directors), a Treasurer and a Secretary, all of whom shall be elected annually by the Board of Directors. Any officer may be removed with or without cause by vote of a majority of all Directors at any meeting. Any person may hold two (2) or more offices. The Board of Directors may, from time to time, appoint such other officers, and designate their powers and duties, as the Board of Directors shall find to be required to manage the affairs of the Association. If the Board of Directors so determines, there may be more than one (1) Vice-President.

5.2. President. The President shall be the chief executive officer of the Association; he shall preside at all meetings of the Members and Directors, shall be ex-officio a member of all standing committees, shall have general and active management of the business of the Association, and shall see that all orders and resolutions of the Board of Directors are carried into effect. He shall execute bonds, mortgages and other contracts requiring seal of the Association, except for those that are permitted by law to be otherwise signed and executed, and the power to execute is delegated by the Board of Directors to some other officer or agent of the Association.

5.3. Vice-Presidents. The Vice-Presidents in the order of their seniority shall, in the absence or disability of the President, perform the duties and exercise the powers of the President; and they shall perform such other duties as the Board of Directors shall assign.

5.4. Secretary. The Secretary shall attend all meetings of the Board of Directors and all meetings of the Members and shall cause all votes and the minutes of all proceedings to be recorded in a book or books to be kept for the purpose, and shall perform like duties for the standing committees when required. He shall give, or cause to be given, notice of all meetings of the Members and of the Board of Directors, and shall perform such other duties as may be prescribed by the Board of Directors or the President. He shall keep in safe custody the seal of the Association and, when authorized by the Board of Directors, affix the same to any instrument requiring it. The Secretary shall be responsible for the proper recording of all duly adopted amendments to the Governing Documents. Any of the foregoing duties may be performed by an Assistant Secretary, if one (1) has been designated, or the Association's manager/management company.

5.5. Treasurer. The Treasurer shall be responsible for Association's funds and securities, the keeping of full and accurate amounts of receipts and disbursements in books belonging to the Association, and the deposit of all monies and other valuable effects in the name and to the credit of the Association in such depositories as may be designated by the Board of Directors. He shall oversee the disbursement of the Association's funds, keeping proper vouchers for such disbursements, and shall render to the President and Directors, at the meetings of the Board of Directors, or whenever they may require it, an accounting of all transactions and of the financial condition of the Association. Any of the foregoing duties may be performed by an Assistant Treasurer, if any has been designated, or the Association's manager/management company.

6. FISCAL MATTERS: The provisions for fiscal management of the Association set forth in the Declaration shall be supplemented by the following provisions.

6.1. Depository. The Association shall maintain its funds in such financial institutions authorized to do business in the State of Florida as shall be designated from time to time by the Board of Directors. Withdrawal of monies from such accounts shall be only by such persons as are authorized by the Board of Directors.

6.2. Budget. The Board of Directors shall adopt a budget of Common Expenses for each fiscal year. A copy of the proposed budget and a notice stating the time, date and place of the meeting of the Board of Directors at which the budget will be adopted shall be mailed to each Member not less than fourteen (14) days prior to that meeting. The budget shall be adopted on a "buildout" basis. The budget must set out separately all fees or charges for recreational amenities, whether owned by the Association, the Developer or another person, if any.

6.3. Reserves for Capital Expenditures and Deferred Maintenance. In addition to annual operating expenses, the proposed budget may include reserve accounts for capital expenditures and deferred maintenance with respect to the Common Area. If the Association's budget includes reserve accounts established by the Developer or the Members pursuant to Section 720.303(6)(d) of the Act, such reserves shall be determined, maintained, and waived in the manner provided therein. Once the Association provides for reserve accounts, the Association shall thereafter determine, maintain, and waive reserves in compliance with the Act, provided that this does not preclude the termination of a reserve account upon approval of a majority of the Voting Interests. Upon such approval, the terminating reserve account shall be removed from the budget. If reserve accounts are established by the Developer, the budget must designate the components for which the reserve accounts may be used. If reserve accounts are not initially provided by the Developer, the Members may elect to do so upon the affirmative approval of a majority of the Voting Interests. Such approval may be obtained by vote of the Members at a duly called Members' meeting or by the written consent of a majority of the Voting Interests. The approval action of the Members must state that reserve accounts shall be provided for in the budget and must designate the components for which the reserve accounts are to be established. Upon approval by the Members, the Board of Directors shall include the required reserve accounts in the budget in the next fiscal year following the approval and each year thereafter. Once established as provided in Section 720.303(6) of the Act, the reserve accounts must be funded or maintained or have their funding waived in the manner provided therein. The amount to be reserved in any account established shall be computed by means of a formula that is based upon estimated remaining useful life and estimated replacement cost or deferred maintenance expense of each reserve item. The Association may adjust replacement reserve assessments annually to take into account any changes in estimates of cost or useful life of a reserve item. Funding formulas for reserves authorized by this section must be based on a separate analysis of each of the required assets or a pooled analysis of two or more of the required assets.

6.4. Assessments. Regular annual Assessments based on the adopted budget shall be paid either monthly, or quarterly, as determined by the Board of Directors. Failure to send or receive notice of Assessments shall not excuse the obligation to pay. If an annual budget has not been adopted at the time the first installment for a fiscal year is due, it shall be presumed that the amount of such installment is the same as the last installment and shall be continued at such rate until a budget is adopted and pro rata Assessments are calculated, at which time any overage or shortage shall be added or subtracted from each unit's next due installment.

6.5. Special Assessments. Special Assessments may be imposed by the Board of Directors when necessary to meet unusual, unexpected, unbudgeted, or non-recurring expenses. Special Assessment may be levied against all Owners and Parcels, or only against the Owners and Parcels in a particular

Neighborhood (in the latter case, if necessary to meet unusual, unexpected, unbudgeted or non-recurring Neighborhood Expenses). Special Assessments are due on the day specified in the resolution of the Board of Directors approving such Assessments. Prior to the Turnover Date, the Board of Directors may not levy a special Assessment unless a majority of the Owners other than the Developer has approved the special Assessment by a majority vote at a duly called Special Members' meeting at which a quorum is present. On and subsequent to the Turnover Date, a special Assessment shall not be levied unless it is first approved by two-thirds (2/3) of the Voting Interests who are obligated to pay the special Assessment, except that membership approval shall not be required for a special Assessment that relates to the necessary maintenance, repair, insurance or replacement of Common Area, or if the special Assessment is required for the Board of Directors to comply with any law, regulation or order of any municipal, state or federal agency. An Assessment (whether annual or special) may not be levied at a Board of Directors meeting unless a written notice of the meeting is provided to each Member at least fourteen (14) days before the meeting, which notice includes a statement that Assessments will be considered at the meeting and the nature of the Assessments. Written notice of any meeting at which special Assessments will be considered must be mailed, delivered, or electronically transmitted (to the extent permitted by law) to the Members and posted conspicuously in The Fields or broadcast on closed-circuit television not less than fourteen (14) days before the meeting.

6.6. Fidelity Bonds. The Association shall maintain insurance or a fidelity bond for all persons who control or disburse Association funds. The insurance policy or fidelity bond must cover the maximum funds that will be in the custody of the Association or its management agent at any one time. As used in this Section 6.6, the term "persons who control or disburse Association funds" includes, but is not limited to, persons who are authorized to sign checks on behalf of the Association, and the President, Secretary and Treasurer. The Association shall bear the cost of any insurance or bond.

6.7. Financial Reporting. Within ninety (90) days after the end of the fiscal year, the Association shall prepare and complete, or contract with a third party for the preparation and completion of, a financial report for the preceding fiscal year. Within twenty-one (21) days after the final report is completed by the Association or received from the third party, but not later than one hundred twenty (120) days after the end of the fiscal year, the Association shall mail or hand deliver to each Member a copy of such report or a written notice that a copy of the report is available upon request at no charge to the Member. The financial report shall be prepared in accordance with Section 720.303(7) of the Act. If approved by a majority of the Voting Interests present at a properly called members' meeting, the Association shall prepare or cause to be prepared a financial report that is less rigorous than otherwise required by the Act. If approved by a majority of the Voting Interests, the Association shall prepare or cause to be prepared a financial report that is more rigorous than otherwise required by the Act.

6.8. Fiscal Year. The fiscal year shall be the calendar year, unless modified by the Board of Directors.

7. RULES AND REGULATIONS: USE RESTRICTIONS: The Board of Directors may, from time to time, adopt and amend Rules and Regulations subject to any limits contained in the Declaration. Written notice of any meeting at which the Rules and Regulations that regulate the use of Parcels may be adopted, amended, or revoked must be mailed, delivered, or electronically transmitted (to the extent permitted by law) to the Members and posted conspicuously in the Common Areas of The Fields or broadcast on closed-circuit television not less than fourteen (14) days before the meeting. A written notice concerning changes to Rules and Regulations that regulate the use of Parcels must include a statement that changes to the Rules and Regulations regarding the use of Parcels will be considered at the meeting. Copies of such Rules and Regulations shall be furnished to each Owner. Any Rules and Regulations must be reasonably related to the promotion of health, happiness and peace of mind of the Owners and uniformly applied and enforced. Subsequent to the Turnover Date, and as long as the Developer owns a Parcel or other property in The

Fields, no new or amended Rule or Regulation shall be effective unless the Developer grants its approval in writing, which approval may be denied in the Developer's discretion.

8. COMPLIANCE AND DEFAULT: REMEDIES: In addition to the remedies provided elsewhere in the Declaration, the following provisions shall apply:

8.1. Obligations Of Members; Remedies At Law Or In Equity; Levy of Fines and Suspension Of Use Rights.

(A) Each Member and the Member's Tenants, Guests and invitees, are governed by, and must comply with the Act and the Governing Documents. Actions at law or in equity, or both, to redress the alleged failure or refusal to comply with the Governing Documents may be brought by the Association or by any Member against:

(1) The Association;
(2) A Member;
(3) Any Director or officer who willfully and knowingly fails to comply with the provisions of the Act and the Governing Documents; and
(4) Any Tenants, Guests, or invitees occupying a Parcel or using the Common Area.

The prevailing party in any such litigation is entitled to recover reasonable attorney's fees and costs. This section does not deprive any person of any other available right or remedy. Certain disputes must be submitted to dispute resolution procedures conducted as more particularly set forth in Section 720.311 of the Act.

(B) The Association may levy reasonable fines against any Member or any Member's Tenant, Guest or invitee for the failure of the Owner of a Parcel or its occupant, licensee, or invitee to comply with any provision of the Governing Documents. The fine shall be in an amount deemed necessary by the Board of Directors to deter future violations, but in no event shall any fine exceed the maximum amounts allowed by law. Fines shall not be secured by a lien against a Parcel unless permitted by the Act.

(C) The Association may suspend, for a reasonable amount of time, the right of a Member, or a Member's Tenant, Guest or invitee, to use the Common Area and facilities, for the failure of the Owner of the Parcel or its occupant, licensee or invitee to comply with any provision of the Governing Documents. The foregoing does not apply to that portion of the Common Area used to provide access or utility services to the Parcel. A suspension may not prohibit the right of an Owner or Tenant of a Parcel from having vehicular and pedestrian ingress to and egress from the Parcel, including, but not limited to, the right to park. The Association may deactivate an Owner's gate transponder or other entry mechanism (if The Fields is gated) and require that the Owner, his Family members, Tenants and Guests gain entry to The Fields through a guest entrance.

(D) A fine or suspension pursuant to (B) and (C) above may not be imposed by the Board of Directors without notice of at least fourteen (14) days to the person sought to be fined and opportunity for hearing before a committee of at least three Members appointed by the Board of Directors who are not officers, Directors, or employees of the Association, or the spouse, parent, child, brother or sister of an officer, Director or employee. If the committee, by majority vote, does not approve the fine or suspension, it may not be imposed. The role of the committee is limited to determining whether to confirm or reject the fine or suspension levied by the Board of Directors.

(E) If a Member is more than ninety (90) days delinquent in paying any fee, fine or other monetary obligation due to the Association, the Association may suspend the rights of the Member, or the

Member's Tenant, Guest, or invitee, to use the Common Area and facilities until the fee, fine or other monetary obligation is paid in full. The foregoing does not apply to that portion of the Common Area used to provide access or utility services to the Parcel. A suspension may not prohibit an Owner or Tenant of a Parcel from having vehicular and pedestrian ingress to and egress from the Parcel, including, but not limited to, the right to park. The Association may deactivate an Owner's gate transponder or other entry mechanism (if The Fields is gated) and require that the Owner, his Family members, Tenants and Guests gain entry to The Fields through a guest entrance. The notice and hearing requirements under subsection (D) above do not apply to a suspension imposed under this subsection (E).

(F) The Association may suspend the voting rights of a Parcel or Member for the nonpayment of any monetary obligation due to the Association that is more than ninety (90) days delinquent. The suspension ends upon full payment of all obligations currently due or overdue the Association. A Voting Interest or consent right allocated to a Parcel or Member which has been suspended by the Association shall be subtracted from the total number of Voting Interests in the Association, which shall be reduced by the number of suspended Voting Interests when calculating the total percentage or number of all Voting Interests available to take or approve any action, and the suspended Voting Interests shall not be considered for any purpose, including but not limited to, the percentage or number of Voting Interests necessary to constitute a quorum, the percentage or number of Voting Interests required to conduct an election, or the percentage or number of Voting Interests required to approve an action under the Act or pursuant to the Governing Documents. The notice and hearing requirements under subsection (D) above do not apply to a suspension imposed under this subsection (F).

(G) All suspensions imposed pursuant to subsections (E) and (F) above must be approved at a properly noticed meeting of the Board of Directors. Upon approval, the Association must notify the Owner, and, if applicable, the Parcel's occupant, licensee or invitee by mail or hand-delivery.

(H) The suspensions permitted by subsections (C), (E) and (F) above apply to a Member and, when appropriate, the Member's Tenants, Guests or invitees, even if the delinquency or failure that resulted in the suspension arose from less than all of the multiple Parcels owned by such Member.

8.2. Availability of Remedies. Each Member, for himself, his heirs, successors and assigns, agrees to the foregoing provisions relating to default and abatement of violations regardless of the harshness of the remedy utilized by the Association and regardless of the availability of other legal remedies. It is the intent of all Members to give the Association methods and procedures which will enable it to operate on a businesslike basis, to collect those monies due it and to preserve the majority's right to enjoy the community free from unreasonable restraint and annoyance.

9. AMENDMENT OF BYLAWS: Amendments to these Bylaws shall be proposed and adopted in the following manner:

9.1. Proposal. Subsequent to the Turnover Date, amendments to these Bylaws may be proposed by the Board of Directors or by a written petition to the Board of Directors, signed by at least one-fourth (1/4) of the Voting Interests.

9.2. Procedure. Upon any amendment or amendments to these Bylaws being proposed by the Board of Directors or the Members, such proposed amendment or amendments shall be submitted to a vote of the Members not later than the next annual meeting for which proper notice can still be given.

9.3. Vote Required. Prior to the Turnover Date, amendments shall be adopted by the Developer. On and subsequent to the Turnover Date, a proposed amendment to these Bylaws shall be adopted if it is approved by at least two-thirds (2/3) of the Voting Interests at any Annual or Special

meeting, provided that notice of the proposed amendment has been given to the Members in accordance with law. As long as the Developer owns a Parcel or other property in The Fields, an amendment to these Bylaws shall not be effective without the prior written consent of the Developer, which consent may be denied in the Developer's discretion, provided, further, that regardless of whether the Developer owns a Parcel or other property in The Fields, no amendment shall be effective if it affects the Developer's rights or alters a provision herein made for the Developer's benefit. Amendment of these Bylaws requires prior written approval of HUD/VA as long as there is a Class "B" membership.

9.4. Certificate; Recording. A copy of each adopted amendment shall be attached to a certificate that the amendment was duly adopted as an amendment to the Bylaws, which certificate shall be in the form required by law and shall be executed by the President or Vice-President with the formalities of a deed. The amendment shall be effective when the certificate and copy of the amendment are recorded in the Public Records of Palm Beach County, Florida.

10. MISCELLANEOUS:

10.1. Gender. Whenever the masculine or singular form of a pronoun is used in these Bylaws, it shall be construed to mean the masculine, feminine or neuter; singular or plural, as the context requires.

10.2. Severability. Should any portion hereof be void or become unenforceable, the remaining provisions of the instrument shall remain in full force and effect.

[remainder of page intentionally left blank]

The foregoing were adopted as the first Bylaws of The Fields Homeowner's Association, Inc. on this ___day of _____, 2017.

_____
David Kanarek, President

EXHIBIT "D"

SFWMD PERMIT

SOUTH FLORIDA WATER MANAGEMENT DISTRICT
ENVIRONMENTAL RESOURCE PERMIT NO. 50-11013-P
DATE ISSUED: MAY 2, 2016

PERMITTEE: PULTE HOME CORPORATION
(GULFSTREAM POLO PROPERTIES PUD)
1400 INDIAN CREEK PARKWAY
JUPITER, FL 33458

PROJECT DESCRIPTION: THE CONCEPTUAL APPROVAL OF A STORMWATER MANAGEMENT SYSTEM SERVING 237.93 ACRES OF RESIDENTIAL DEVELOPMENT FOR A PROJECT KNOWN AS GULFSTREAM POLO PROPERTIES PUD. ADDITIONALLY, GRADING AND LAKE CONSTRUCTION ARE AUTHORIZED. STORMWATER INFRASTRUCTURE (I.E. PIPING AND CONTROL STRUCTURES) ARE NOT PROPOSED FOR CONSTRUCTION AT THIS TIME.

PROJECT LOCATION: PALM BEACH COUNTY , SECTION 29 TWP 44S RGE 42E

PERMIT DURATION: See Special Condition No:1.

This is to notify you of the District's agency action concerning Permit Application No. 160215-23, dated February 15, 2016. This action is taken pursuant to the provisions of Chapter 373, Part IV, Florida Statutes (F.S.).

Based on the information provided, District rules have been adhered to and an Environmental Resource Permit is in effect for this project subject to:

1. Not receiving a filed request for an administrative hearing pursuant to Section 120.57 and Section 120.569, or request a judicial review pursuant Section 120.68, Florida Statutes.
2. The attached 18 General Conditions.
3. The attached 11 Special Conditions.
4. The attached 3 Exhibits.

Should you object to these conditions, please refer to the attached "Notice of Rights" which addresses the procedures to be followed if you desire a public hearing or other review of the proposed agency action. Should you wish to object to the proposed agency action or file a petition, please provide written objections, petitions and/or waivers to:

Office of the District Clerk
South Florida Water Management District
Post Office Box 24680
West Palm Beach, FL 33416-4680
e-mail: clerk@sfwmd.gov

Please contact this office if you have any questions concerning this matter. If we do not hear from you in accordance with the "Notice of Rights", we will assume that you concur with the District's action.

CERTIFICATION OF SERVICE

I HEREBY CERTIFY THAT this written notice has been mailed or electronically submitted to the Permittee (and the persons listed on the attached distribution list) this 3rd day of May, 2016, in accordance with Section 120.60(3), F.S. Notice was also electronically posted on this date through a link on the home page of the District's website (my.sfwmd.gov/ePermitting).

By Lisanda Jones
DEPUTY CLERK
SOUTH FLORIDA WATER MANAGEMENT DISTRICT

Attachments

SPECIAL CONDITIONS

1. The conceptual phase of this permit shall expire on May 2, 2036.
   The construction phase of this permit shall expire on May 2, 2021.

2. Operation and maintenance of the stormwater management system shall be the responsibility of PROPERTY OWNER ASSOCIATION. Within one year of permit issuance or concurrent with the engineering certification of construction completion, whichever comes first, the permittee shall submit a copy of the recorded deed restrictions (or declaration of condominium, if applicable), a copy of the filed articles of incorporation, and a copy of the certificate of incorporation for the association.

3. Discharge Facilities:

   Basin: North Basin, Structure: CS-1

   1-4' WIDE SHARP CRESTED weir with crest at elev. 18.45' NAVD 88.
   1-1.1' W X .75' H RECTANGULAR ORIFICE with invert at elev. 14.5' NAVD 88.

   Receiving body : LWDD L-13 Canal
   Control elev : 14.5 feet NAVD 88.

   Basin: South Basin, Structure: CS-2

   1-4' WIDE SHARP CRESTED weir with crest at elev. 17.65' NAVD 88.
   1-1.2' W X .8' H RECTANGULAR ORIFICE with invert at elev. 14.5' NAVD 88.

   Receiving body : LWDD L-13 Canal
   Control elev : 14.5 feet NAVD 88.

   Basin: South Basin, Structure: CS-3

   1-4' WIDE SHARP CRESTED weir with crest at elev. 17.65' NAVD 88.
   1-1.2' W X .8' H RECTANGULAR ORIFICE with invert at elev. 14.5' NAVD 88.

   Receiving body : LWDD E-2W Canal
   Control elev : 14.5 feet NAVD 88.

4. Prior to the commencement of construction and pursuant to Section 4.2.3(d)(3) of Applicant's Handbook Volume I, the permittee shall demonstrate ownership of the project area to the District's Environmental Resource Compliance staff.

5. Lake side slopes shall be no steeper than 4:1 (horizontal:vertical) to a depth of two feet below the control elevation. Side slopes shall be nurtured or planted from 2 feet below to 1 foot above control elevation to insure vegetative growth, unless shown on the plans.

6. No construction is authorized until such time as the permittee acquires title to all the land within the proposed construction project.

7. A stable, permanent and accessible elevation reference shall be established on or within one hundred (100) feet of all permitted discharge structures no later than the submission of the certification report. The location of the elevation reference must be noted on or with the certification report.

8. The following are exhibits to this permit:

   Exhibit No. 1 Location Map
   Exhibit No. 2 Land Use Tables

Exhibit No. 3 Conceptual Site Plans & Pollution Prevention Plans

9. Prior to initiating construction activities associated with this Environmental Resource Permit (ERP), the permittee is required to hold a pre-construction meeting with field representatives, consultants, contractors, District Environmental Resource Compliance (ERC) staff, and any other local government entities as necessary.

   The purpose of the pre-construction meeting is to discuss construction methods, sequencing, best management practices, identify work areas, staking and roping of preserves where applicable, and to facilitate coordination and assistance amongst relevant parties.

   To schedule a pre-construction meeting, please contact ERC staff from the West Palm Beach Office at (561) 686-8800 or via e-mail at: pre-con@sfwmd.gov. When sending a request for a pre-construction meeting, please include the application number, permit number, and contact name and phone number.

10. Minimum building floor elevation: BASIN: North Basin - 19.50 feet NAVD 88. BASIN: South Basin - 19.30 feet NAVD 88.

11. Minimum road crown elevation: Basin: North Basin - 17.70 feet NAVD 88.
    Basin: South Basin - 17.50 feet NAVD 88.

GENERAL CONDITIONS

1. All activities shall be implemented following the plans, specifications and performance criteria approved by this permit. Any deviations must be authorized in a permit modification in accordance with Rule 62-330.315, F.A.C. Any deviations that are not so authorized shall subject the permittee to enforcement action and revocation of the permit under Chapter 373, F.S.

2. A Recorded Notice of Environmental Resource Permit may be recorded in the county public records in accordance with Rule 62-330.090(7), F.A.C. Such notice is not an encumbrance upon the property.

3. Activities shall be conducted in a manner that does not cause or contribute to violations of state water quality standards. Performance-based erosion and sediment control best management practices shall be installed immediately prior to, and be maintained during and after construction as needed, to prevent adverse impacts to the water resources and adjacent lands. Such practices shall be in accordance with the "State of Florida Erosion and Sediment Control Designer and Reviewer Manual" (Florida Department of Environmental Protection and Florida Department of Transportation June 2007), and the "Florida Stormwater Erosion and Sedimentation Control Inspector's Manual" (Florida Department of Environmental Protection, Nonpoint Source Management Section, Tallahassee, Florida, July 2008), unless a project-specific erosion and sediment control plan is approved or other water quality control measures are required as part of the permit.

4. At least 48 hours prior to beginning the authorized activities, the permittee shall submit to the Agency a fully executed Form 62-330.350(1), "Construction Commencement Notice" indicating the expected start and completion dates. If available, an Agency website that fulfills this notification requirement may be used in lieu of the form.

5. Unless the permit is transferred under Rule 62-330.340, F.A.C., or transferred to an operating entity under Rule 62-330.310, F.A.C., the permittee is liable to comply with the plans, terms and conditions of the permit for the life of the project or activity.

6. Within 30 days after completing construction of the entire project, or any independent portion of the project, the permittee shall provide the following to the Agency, as applicable:
   a. For an individual, private single-family residential dwelling unit, duplex, triplex, or quadruplex- "Construction Completion and Inspection Certification for Activities Associated With a Private Single-Family Dwelling Unit"[Form 62-330.310(3)]; or
   b. For all other activities- "As-Built Certification and Request for Conversion to Operational Phase" [Form 62-330.310(1)].
   c. If available, an Agency website that fulfills this certification requirement may be used in lieu of the form.

7. If the final operation and maintenance entity is a third party:
   a. Prior to sales of any lot or unit served by the activity and within one year of permit issuance, or within 30 days of as-built certification, whichever comes first, the permittee shall submit, as applicable, a copy of the operation and maintenance documents (see sections 12.3 thru 12.3.3 of Applicant's Handbook Volume I) as filed with the Department of State, Division of Corporations and a copy of any easement, plat, or deed restriction needed to operate or maintain the project, as recorded with the Clerk of the Court in the County in which the activity is located.
   b. Within 30 days of submittal of the as- built certification, the permittee shall submit "Request for Transfer of Environmental Resource Permit to the Perpetual Operation Entity" [Form 62-330.310(2)] to transfer the permit to the operation and maintenance entity, along with the documentation requested in the form. If available, an Agency website that fulfills this transfer requirement may be used in lieu of the form.

8. The permittee shall notify the Agency in writing of changes required by any other regulatory agency that require changes to the permitted activity, and any required modification of this permit must be obtained prior to implementing the changes.

9. This permit does not:
   a. Convey to the permittee any property rights or privileges, or any other rights or privileges other than those specified

herein or in Chapter 62-330, F.A.C.;
b. Convey to the permittee or create in the permittee any interest in real property;
c. Relieve the permittee from the need to obtain and comply with any other required federal, state, and local authorization, law, rule, or ordinance; or
d. Authorize any entrance upon or work on property that is not owned, held in easement, or controlled by the permittee.

10. Prior to conducting any activities on state-owned submerged lands or other lands of the state, title to which is vested in the Board of Trustees of the Internal Improvement Trust Fund, the permittee must receive all necessary approvals and authorizations under Chapters 253 and 258, F.S. Written authorization that requires formal execution by the Board of Trustees of the Internal Improvement Trust Fund shall not be considered received until it has been fully executed.

11. The permittee shall hold and save the Agency harmless from any and all damages, claims, or liabilities that may arise by reason of the construction, alteration, operation, maintenance, removal, abandonment or use of any project authorized by the permit.

12. The permittee shall notify the Agency in writing:
a. Immediately if any previously submitted information is discovered to be inaccurate; and
b. Within 30 days of any conveyance or division of ownership or control of the property or the system, other than conveyance via a long-term lease, and the new owner shall request transfer of the permit in accordance with Rule 62-330.340, F.A.C. This does not apply to the sale of lots or units in residential or commercial subdivisions or condominiums where the stormwater management system has been completed and converted to the operation phase.

13. Upon reasonable notice to the permittee, Agency staff with proper identification shall have permission to enter, inspect, sample and test the project or activities to ensure conformity with the plans and specifications authorized in the permit.

14. If any prehistoric or historic artifacts, such as pottery or ceramics, stone tools or metal implements, dugout canoes, or any other physical remains that could be associated with Native American cultures, or early colonial or American settlement are encountered at any time within the project site area, work involving subsurface disturbance in the immediate vicinity of such discoveries shall cease. The permittee or other designee shall contact the Florida Department of State, Division of Historical Resources, Compliance and Review Section, at (850) 245-6333 or (800) 847-7278, as well as the appropriate permitting agency office. Such subsurface work shall not resume without verbal or written authorization from the Division of Historical Resources. If unmarked human remains are encountered, all work shall stop immediately and notification shall be provided in accordance with Section 872.05, F.S.

15. Any delineation of the extent of a wetland or other surface water submitted as part of the permit application, including plans or other supporting documentation, shall not be considered binding unless a specific condition of this permit or a formal determination under Rule 62-330.201, F.A.C., provides otherwise.

16. The permittee shall provide routine maintenance of all components of the stormwater management system to remove trapped sediments and debris. Removed materials shall be disposed of in a landfill or other uplands in a manner that does not require a permit under Chapter 62-330, F.A.C., or cause violations of state water quality standards.

17. This permit is issued based on the applicant's submitted information that reasonably demonstrates that adverse water resource-related impacts will not be caused by the completed permit activity. If any adverse impacts result, the Agency will require the permittee to eliminate the cause, obtain any necessary permit modification, and take any necessary corrective actions to resolve the adverse impacts.

18. A complete copy of this permit shall be kept at the work site of the permitted activity during the construction phase, and shall be available for review at the work site upon request by the Agency staff. The permittee shall require the contractor to review the complete permit prior to beginning construction.

NOTICE OF RIGHTS

As required by Sections 120.569 and 120.60(3), Fla. Stat., the following is notice of the opportunities which may be available for administrative hearing or judicial review when the substantial interests of a party are determined by an agency. Please note that this Notice of Rights is not intended to provide legal advice. Not all of the legal proceedings detailed below may be an applicable or appropriate remedy. You may wish to consult an attorney regarding your legal rights.

RIGHT TO REQUEST ADMINISTRATIVE HEARING

A person whose substantial interests are or may be affected by the South Florida Water Management District's (SFWMD or District) action has the right to request an administrative hearing on that action pursuant to Sections 120.569 and 120.57, Fla. Stat. Persons seeking a hearing on a SFWMD decision which affects or may affect their substantial interests shall file a petition for hearing with the Office of the District Clerk of the SFWMD, in accordance with the filing instructions set forth herein, within 21 days of receipt of written notice of the decision, unless one of the following shorter time periods apply: (1) within 14 days of the notice of consolidated intent to grant or deny concurrently reviewed applications for environmental resource permits and use of sovereign submerged lands pursuant to Section 373.427, Fla. Stat.; or (2) within 14 days of service of an Administrative Order pursuant to Section 373.119(1), Fla. Stat. "Receipt of written notice of agency decision" means receipt of written notice through mail, electronic mail, or posting that the SFWMD has or intends to take final agency action, or publication of notice that the SFWMD has or intends to take final agency action. Any person who receives written notice of a SFWMD decision and fails to file a written request for hearing within the timeframe described above waives the right to request a hearing on that decision.

If the District takes final agency action which materially differs from the noticed intended agency decision, persons who may be substantially affected shall, unless otherwise provided by law, have an additional Rule 28-106.111, Fla. Admin. Code, point of entry.

Any person to whom an emergency order is directed pursuant to Section 373.119(2), Fla. Stat., shall comply therewith immediately, but on petition to the board shall be afforded a hearing as soon as possible.

A person may file a request for an extension of time for filing a petition. The SFWMD may, for good cause, grant the request. Requests for extension of time must be filed with the SFWMD prior to the deadline for filing a petition for hearing. Such requests for extension shall contain a certificate that the moving party has consulted with all other parties concerning the extension and that the SFWMD and any other parties agree to or oppose the extension. A timely request for an extension of time shall toll the running of the time period for filing a petition until the request is acted upon.

FILING INSTRUCTIONS

A petition for administrative hearing must be filed with the Office of the District Clerk of the SFWMD. Filings with the Office of the District Clerk may be made by mail, hand-delivery, or e-mail. Filings by facsimile will not be accepted. A petition for administrative hearing or other document is deemed filed upon receipt during normal business hours by the Office of the District Clerk at SFWMD headquarters in West Palm Beach, Florida. The District's normal business hours are 8:00 a.m. – 5:00 p.m., excluding weekends and District holidays. Any document received by the Office of the District Clerk after 5:00 p.m. shall be deemed filed as of 8:00 a.m. on the next regular business day. Additional filing instructions are as follows:

- Filings by mail must be addressed to the Office of the District Clerk, P.O. Box 24680, West Palm Beach, Florida 33416.

- Filings by hand-delivery must be delivered to the Office of the District Clerk. Delivery of a petition to the SFWMD's security desk does not constitute filing. It will be necessary to request that the SFWMD's security officer contact the Office of the District Clerk. An employee of the SFWMD's Clerk's office will receive and file the petition.
- Filings by e-mail must be transmitted to the Office of the District Clerk at clerk@sfwmd.gov. The filing date for a document transmitted by electronic mail shall be the date the Office of the District Clerk receives the complete document. A party who files a document by e-mail shall (1) represent that the original physically signed document will be retained by that party for the duration of the proceeding and of any subsequent appeal or subsequent proceeding in that cause and that the party shall produce it upon the request of other parties; and (2) be responsible for any delay, disruption, or interruption of the electronic signals and accepts the full risk that the document may not be properly filed.

INITIATION OF AN ADMINISTRATIVE HEARING

Pursuant to Sections 120.54(5)(b)4. and 120.569(2)(c), Fla. Stat., and Rules 28-106.201 and 28-106.301, Fla. Admin. Code, initiation of an administrative hearing shall be made by written petition to the SFWMD in legible form and on 8 1/2 by 11 inch white paper. All petitions shall contain:

1. Identification of the action being contested, including the permit number, application number, SFWMD file number or any other SFWMD identification number, if known.
2. The name, address, any email address, any facsimile number, and telephone number of the petitioner and petitioner's representative, if any.
3. An explanation of how the petitioner's substantial interests will be affected by the agency determination.
4. A statement of when and how the petitioner received notice of the SFWMD's decision.
5. A statement of all disputed issues of material fact. If there are none, the petition must so indicate.
6. A concise statement of the ultimate facts alleged, including the specific facts the petitioner contends warrant reversal or modification of the SFWMD's proposed action.
7. A statement of the specific rules or statutes the petitioner contends require reversal or modification of the SFWMD's proposed action.
8. If disputed issues of material fact exist, the statement must also include an explanation of how the alleged facts relate to the specific rules or statutes.
9. A statement of the relief sought by the petitioner, stating precisely the action the petitioner wishes the SFWMD to take with respect to the SFWMD's proposed action.

MEDIATION

The procedures for pursuing mediation are set forth in Section 120.573, Fla. Stat., and Rules 28-106.111 and 28-106.401–.405, Fla. Admin. Code. The SFWMD is not proposing mediation for this agency action under Section 120.573, Fla. Stat., at this time.

RIGHT TO SEEK JUDICIAL REVIEW

Pursuant to Section 120.68, Fla. Stat., and in accordance with Florida Rule of Appellate Procedure 9.110, a party who is adversely affected by final SFWMD action may seek judicial review of the SFWMD's final decision by filing a notice of appeal with the Office of the District Clerk of the SFWMD in accordance with the filing instructions set forth herein within 30 days of rendition of the order to be reviewed, and by filing a copy of the notice with the clerk of the appropriate district court of appeal.

FINAL APPROVED BY EXECUTIVE DIRECTOR MAY 2, 2016

Last Date For Agency Action: June 20, 2016

INDIVIDUAL ENVIRONMENTAL RESOURCE PERMIT STAFF REPORT

Project Name: Gulfstream Polo Properties PUD

Permit No.: 50-11013-P

Application No.: 160215-23 160222-11 WU Related
160215-19 WU Related

Application Type: Environmental Resource (Conceptual Approval and New Construction/Operation)

Location: Palm Beach County, S29/T44S/R42E

Permittee : Pulte Home Corporation

Operating Entity : Property Owner Association

Project Area: 237.93 acres

Permit Area: 237.93 acres

Project Land Use: Residential

Drainage Basin: C-16

Receiving Body: LWDD L-13 & E-2W Canals

Special Drainage District: Lake Worth Drainage District

Total Acres Wetland Onsite: .34
Total Acres Impacted Onsite : .34
Conservation Easement To District : No
Sovereign Submerged Lands: No

PROJECT SUMMARY:

This Environmental Resource Permit authorizes the conceptual approval of a stormwater management system serving 237.93 acres of residential development for a project known as Gulfstream Polo Properties PUD. Additionally, grading and lake construction are authorized. Stormwater infrastructure (i.e. piping & control structures) are not proposed for construction at this time.

This project is to conceptually approve a 973 unit residential subdivision. The site will be divided into two (2) primary basins (i.e. North and South). Each basin will have their own distinct stormwater management system with outfall structures (see Discharge Structures in this Staff Report and Exhibit No. 3).

Prior to construction of future phases, a permit modification will be required. Plans and calculations shall be submitted to demonstrate compliance with the land use and site grading assumptions made in this application.

Issuance of this permit constitutes certification of compliance with state water quality standards in accordance with Rule 62-330.062 Florida Administrative Code (F.A.C.).

PROJECT EVALUATION:

PROJECT SITE DESCRIPTION:

The site is located south of Lake Worth Road and west of the Turnpike in Palm Beach County. Refer to Exhibit 1 for a location map.

There are no permitted water management facilities within the project area. The site contains horse farms and polo fields.

For information on the wetlands and surface waters within the project, please refer to the Wetlands and Surface Waters section of this staff report.

LAND USE:

See Exhibit No. 2 for basin (i.e. North & South) and sub-basin land use tables.

WATER QUANTITY :

Discharge Rate :

As shown in the table below, the project discharge is within the allowable limit for the area.

Discharge Storm Frequency : 25 YEAR-3 DAY Design Rainfall : 11.5 inches

Basin	Allow Disch (cfs)	Method Of Determination	Peak Disch (cfs)	Peak Stage (ft, NAVD 88)
North Basin	7.82	Discharge Formula	7.41	18.38
South Basin	15.45	Discharge Formula	15.21	17.64

Finished Floors :

As shown in the following table and the attached exhibits, minimum finished floor elevations have been set at or above the calculated design storm flood elevation.

Building Storm Frequency : 100 YEAR-3 DAY Design Rainfall : 14 inches

Basin	Peak Stage (ft, NAVD 88)	Proposed Min. Finished Floors (ft, NAVD 88)	FEMA Elevation (ft, NAVD 88)
North Basin	19.09	19.5	N/A
South Basin	18.54	19.3	N/A

Road Design :

As shown in the following table and the attached exhibits, minimum road center lines have been set at or above the calculated design storm flood elevation.

Road Storm Frequency : 5 YEAR-1 DAY Design Rainfall: 6.5 inches

Basin	Peak Stage (ft, NAVD 88)	Proposed Min. Road Crown (ft, NAVD 88)
North Basin	16.92	17.7
South Basin	16.14	17.5

Control Elevation :

Basin	Area (Acres)	Ctrl Elev (ft, NAVD 88)	WSWT Ctrl Elev (ft, NAVD 88)	Method Of Determination
North Basin	79.96	14.5	14.50	Wet Season Water Table
South Basin	157.97	14.5	14.50	Wet Season Water Table

Receiving Body :

Basin	Str.#	Receiving Body
North Basin	CS-1	LWDD L-13 Canal
South Basin	CS-2	LWDD L-13 Canal
South Basin	CS-3	LWDD E-2W Canal

Discharge Structures: Note: The units for all the elevation values of structures are (ft, NAVD 88)

Bleeders:

Basin	Str#	Count	Type	Width	Height	Length	Dia.	Invert Angle	Invert Elev.
North Basin	CS-1	1	Rectangular Orifice	1.1'	.75'				14.5
South Basin	CS-2	1	Rectangular Orifice	1.2'	.8'				14.5
South Basin	CS-3	1	Rectangular Orifice	1.2'	.8'				14.5

Weirs:

Basin	Str#	Count	Type	Width	Height	Length	Dia.	Elev.
North Basin	CS-1	1	Sharp Crested	4'				18.45 (crest)
South Basin	CS-2	1	Sharp Crested	4'				17.65 (crest)
South Basin	CS-3	1	Sharp Crested	4'				17.65 (crest)

WATER QUALITY :

The project provides the required water quality treatment volume based on two and one half (2.5) inches over the impervious area in the North Basin and one (1) inch over the basin area in the South Basin.

Pursuant to Appendix E of Volume II, the water quality treatment volume provided includes an additional 50% treatment volume above the requirements in Section 4.2 of Volume II to provide reasonable assurance that the project will not have an adverse impact on the quality of the downstream receiving body.

The project also includes implementation of a Construction Pollution Prevention Plan (Exhibit No. 3) as additional reasonable assurance of compliance with water quality criteria during construction and operation.

Basin	Treatment Method		Vol Req.d (ac-ft)	Vol Prov'd
North Basin	Treatment	Wet Detention	11.6	11.6
South Basin	Treatment	Wet Detention	19.75	19.75

WETLANDS:

Wetlands And Other Surface Waters:

The project area contains three small wetlands (0.13 acre, 0.21 acre and 0.14 acre, respectively), three ponds (2.9 acres) and approximately 10.4 acres of ditches. Please see Exhibit 3.0 for wetland and surface water locations. The wetlands can be generally described as remnant forested systems with cypress and invasive exotic vegetation.

The project will result in impacts to all of the wetlands, ponds and most of the ditches as described in the table below. Mitigation is not required because all of the wetlands are less than 0.5 acre in size, and the total acreage of wetlands 2 and 3, which are connected via other surface waters, is less than 0.5 acre. (Section 10.2.2.1 of Applicant's Handbook Volume I.)

The site does contain suitable foraging habitat for the wood stork, a federally threatened species. The habitat provided by the surface waters is not significant, and will be replaced by the proposed 13 acres of lake bank in the surface water management system, which will have a planted littoral zone.

Wetland Inventory :

CONSTRUCTION MOD -Gulfstream Polo

Site Id	Site Type	Pre-Development				Post-Development						
		Pre Fluc cs	AA Type	Acreage (Acres)	Current Wo Pres	With Project	Time Lag (Yrs)	Risk Factor	Pres. Adj. Factor	Post Fluccs	Adj Delta	Functional Gain / Loss
3	OFF	600	Direct	.14							.000	.000
1	ON	600	Direct	.13							.000	.000
2	ON	600	Direct	.21							.000	.000
ditches	ON	510	Direct	10.40							.000	.000
ponds	ON	500	Direct	2.90							.000	.000
			Total:	13.78								.00

Fluccs Code	Description
500	Water
510	Streams And Waterways
600	Wetlands

CERTIFICATION, OPERATION, AND MAINTENANCE:

Pursuant to Chapter 62-330.310 Florida Administrative Code (F.A.C.), Individual Permits will not be converted from the construction phase to the operation phase until construction completion certification of the project is submitted to and accepted by the District. This includes compliance with all permit conditions, except for any long term maintenance and monitoring requirements. It is suggested that the permittee retain the services of an appropriate professional registered in the State of Florida for periodic observation of construction of the project.

For projects permitted with an operating entity that is different from the permittee, it should be noted that until the construction completion certification is accepted by the District and the permit is transferred to an acceptable operating entity pursuant to Sections 12.1-12.3 of the Applicant's Handbook Volume I and Section 62-330.310, F.A.C., the permittee is liable for operation and maintenance in compliance with the terms and conditions of this permit.

In accordance with Section 373.416(2), F.S., unless revoked or abandoned, all stormwater management systems and works permitted under Part IV of Chapter 373, F.S., must be operated and maintained in perpetuity.

The efficiency of stormwater management systems, dams, impoundments, and most other project components will decrease over time without periodic maintenance. The operation and maintenance entity must perform periodic inspections to identify if there are any deficiencies in structural integrity, degradation due to insufficient maintenance, or improper operation of projects that may endanger public health, safety, or welfare, or the water resources. If deficiencies are found, the operation and maintenance entity will be responsible for correcting the deficiencies in a timely manner to prevent compromises to flood protection and water quality. See Section 12.4 of Applicant's Handbook Volume I for Minimum Operation and Maintenance Standards.

RELATED CONCERNS:

Water Use Permit Status:

Water Use Application Nos. 160215-19 & 160222-11 for irrigation and dewatering for the parcel containing Lakes N2 and N3 have been submitted and are being processed concurrently for this project. Additional Water Use permits will be necessary for dewatering and irrigation of the other parcels.

This permit does not release the permittee from obtaining all necessary Water Use authorization(s) prior to the commencement of activities which will require such authorization, including construction dewatering and irrigation.

CERP:

The proposed project is not located within or adjacent to a Comprehensive Everglades Restoration Project component.

Potable Water Supplier:

Palm Beach County Utilities

Waste Water System/Supplier:

Palm Beach County Utilities

Right-Of-Way Permit Status:

A District Right-of-Way Permit is not required for this project.

Historical/Archeological Resources:

The District has received correspondence from the Florida Department of State, Division of Historical Resources indicating that no significant archaeological or historical resources are recorded in the project area and the project is therefore unlikely to have an effect upon any such properties.

DEO/CZM Consistency Review:

The issuance of this permit constitutes a finding of consistency with the Florida Coastal Management Program.

Third Party Interest:

No third party has contacted the District with concerns about this application.

Enforcement:

There has been no enforcement activity associated with this application.

STAFF RECOMMENDATION TO EXECUTIVE DIRECTOR:

The Staff recommends that the following be issued :

The conceptual approval of a stormwater management system serving 237.93 acres of residential development for a project known as Gulfstream Polo Properties PUD. Additionally, grading and lake construction are authorized. Stormwater infrastructure (i.e. piping & control structures) are not proposed for construction at this time.

Based on the information provided, District rules have been adhered to.

Staff recommendation is for approval subject to the attached
General and Special Conditions.

STAFF REVIEW:

NATURAL RESOURCE MANAGEMENT APPROVAL

ENVIRONMENTAL EVALUATION

Melinda Parrott

for

SUPERVISOR

Ricardo A. Valera, P.E.

SURFACE WATER MANAGEMENT APPROVAL

ENGINEERING EVALUATION

Joseph D. Santangelo

SUPERVISOR

for

Carlos A. de Rojas, P.E.

ENVIRONMENTAL RESOURCE COMPLIANCE BUREAU CHIEF :

Ricardo A. Valera, P.E.

DATE: May 2, 2016

REGULATION DIVISION ASSISTANT DIRECTOR :

Anthony M. Waterhouse, P.E.

DATE: 5/2/16

GENERAL CONDITIONS

1. All activities shall be implemented following the plans, specifications and performance criteria approved by this permit. Any deviations must be authorized in a permit modification in accordance with Rule 62-330.315, F.A.C. Any deviations that are not so authorized shall subject the permittee to enforcement action and revocation of the permit under Chapter 373, F.S.

2. A Recorded Notice of Environmental Resource Permit may be recorded in the county public records in accordance with Rule 62-330.090(7), F.A.C. Such notice is not an encumbrance upon the property.

3. Activities shall be conducted in a manner that does not cause or contribute to violations of state water quality standards. Performance-based erosion and sediment control best management practices shall be installed immediately prior to, and be maintained during and after construction as needed, to prevent adverse impacts to the water resources and adjacent lands. Such practices shall be in accordance with the "State of Florida Erosion and Sediment Control Designer and Reviewer Manual" (Florida Department of Environmental Protection and Florida Department of Transportation June 2007), and the "Florida Stormwater Erosion and Sedimentation Control Inspector's Manual" (Florida Department of Environmental Protection, Nonpoint Source Management Section, Tallahassee, Florida, July 2008), unless a project-specific erosion and sediment control plan is approved or other water quality control measures are required as part of the permit.

4. At least 48 hours prior to beginning the authorized activities, the permittee shall submit to the Agency a fully executed Form 62-330.350(1), "Construction Commencement Notice" indicating the expected start and completion dates. If available, an Agency website that fulfills this notification requirement may be used in lieu of the form.

5. Unless the permit is transferred under Rule 62-330.340, F.A.C., or transferred to an operating entity under Rule 62-330.310, F.A.C., the permittee is liable to comply with the plans, terms and conditions of the permit for the life of the project or activity.

6. Within 30 days after completing construction of the entire project, or any independent portion of the project, the permittee shall provide the following to the Agency, as applicable:
   a. For an individual, private single-family residential dwelling unit, duplex, triplex, or quadruplex- "Construction Completion and Inspection Certification for Activities Associated With a Private Single-Family Dwelling Unit"[Form 62-330.310(3)]; or
   b. For all other activities- "As-Built Certification and Request for Conversion to Operational Phase" [Form 62-330.310(1)].
   c. If available, an Agency website that fulfills this certification requirement may be used in lieu of the form.

7. If the final operation and maintenance entity is a third party:
   a. Prior to sales of any lot or unit served by the activity and within one year of permit issuance, or within 30 days of as- built certification, whichever comes first, the permittee shall submit, as applicable, a copy of the operation and maintenance documents (see sections 12.3 thru 12.3.3 of Applicant's Handbook Volume I) as filed with the Department of State, Division of Corporations and a copy of any easement, plat, or deed restriction needed to operate or maintain the project, as recorded with the Clerk of the Court in the County in which the activity is located.
   b. Within 30 days of submittal of the as- built certification, the permittee shall submit "Request for Transfer of Environmental Resource Permit to the Perpetual Operation Entity" [Form 62-330.310(2)] to transfer the permit to the operation and maintenance entity, along with the documentation requested in the form. If available, an Agency website that fulfills this transfer requirement may be used in lieu of the form.

GENERAL CONDITIONS

8. The permittee shall notify the Agency in writing of changes required by any other regulatory agency that require changes to the permitted activity, and any required modification of this permit must be obtained prior to implementing the changes.

9. This permit does not:
   a. Convey to the permittee any property rights or privileges, or any other rights or privileges other than those specified herein or in Chapter 62-330, F.A.C.;
   b. Convey to the permittee or create in the permittee any interest in real property;
   c. Relieve the permittee from the need to obtain and comply with any other required federal, state, and local authorization, law, rule, or ordinance; or
   d. Authorize any entrance upon or work on property that is not owned, held in easement, or controlled by the permittee.

10. Prior to conducting any activities on state-owned submerged lands or other lands of the state, title to which is vested in the Board of Trustees of the Internal Improvement Trust Fund, the permittee must receive all necessary approvals and authorizations under Chapters 253 and 258, F.S. Written authorization that requires formal execution by the Board of Trustees of the Internal Improvement Trust Fund shall not be considered received until it has been fully executed.

11. The permittee shall hold and save the Agency harmless from any and all damages, claims, or liabilities that may arise by reason of the construction, alteration, operation, maintenance, removal, abandonment or use of any project authorized by the permit.

12. The permittee shall notify the Agency in writing:
    a. Immediately if any previously submitted information is discovered to be inaccurate; and
    b. Within 30 days of any conveyance or division of ownership or control of the property or the system, other than conveyance via a long-term lease, and the new owner shall request transfer of the permit in accordance with Rule 62-330.340, F.A.C. This does not apply to the sale of lots or units in residential or commercial subdivisions or condominiums where the stormwater management system has been completed and converted to the operation phase.

13. Upon reasonable notice to the permittee, Agency staff with proper identification shall have permission to enter, inspect, sample and test the project or activities to ensure conformity with the plans and specifications authorized in the permit.

14. If any prehistoric or historic artifacts, such as pottery or ceramics, stone tools or metal implements, dugout canoes, or any other physical remains that could be associated with Native American cultures, or early colonial or American settlement are encountered at any time within the project site area, work involving subsurface disturbance in the immediate vicinity of such discoveries shall cease. The permittee or other designee shall contact the Florida Department of State, Division of Historical Resources, Compliance and Review Section, at (850) 245-6333 or (800) 847-7278, as well as the appropriate permitting agency office. Such subsurface work shall not resume without verbal or written authorization from the Division of Historical Resources. If unmarked human remains are encountered, all work shall stop immediately and notification shall be provided in accordance with Section 872.05, F.S.

15. Any delineation of the extent of a wetland or other surface water submitted as part of the permit application, including plans or other supporting documentation, shall not be considered binding unless a specific condition of this permit or a formal determination under Rule 62-330.201, F.A.C., provides otherwise.

GENERAL CONDITIONS

16. The permittee shall provide routine maintenance of all components of the stormwater management system to remove trapped sediments and debris. Removed materials shall be disposed of in a landfill or other uplands in a manner that does not require a permit under Chapter 62-330, F.A.C., or cause violations of state water quality standards.

17. This permit is issued based on the applicant's submitted information that reasonably demonstrates that adverse water resource-related impacts will not be caused by the completed permit activity. If any adverse impacts result, the Agency will require the permittee to eliminate the cause, obtain any necessary permit modification, and take any necessary corrective actions to resolve the adverse impacts.

18. A complete copy of this permit shall be kept at the work site of the permitted activity during the construction phase, and shall be available for review at the work site upon request by the Agency staff. The permittee shall require the contractor to review the complete permit prior to beginning construction.

SPECIAL CONDITIONS

1. The conceptual phase of this permit shall expire on May 2, 2036.
   The construction phase of this permit shall expire on May 2, 2021.

2. Operation and maintenance of the stormwater management system shall be the responsibility of PROPERTY OWNER ASSOCIATION. Within one year of permit issuance or concurrent with the engineering certification of construction completion, whichever comes first, the permittee shall submit a copy of the recorded deed restrictions (or declaration of condominium, if applicable), a copy of the filed articles of incorporation, and a copy of the certificate of incorporation for the association.

3. Discharge Facilities:

   Basin: North Basin, Structure: CS-1

   1-4' WIDE SHARP CRESTED weir with crest at elev. 18.45' NAVD 88.
   1-1.1' W X .75' H RECTANGULAR ORIFICE with invert at elev. 14.5' NAVD 88.

   Receiving body : LWDD L-13 Canal
   Control elev : 14.5 feet NAVD 88.

   Basin: South Basin, Structure: CS-2

   1-4' WIDE SHARP CRESTED weir with crest at elev. 17.65' NAVD 88.
   1-1.2' W X .8' H RECTANGULAR ORIFICE with invert at elev. 14.5' NAVD 88.

   Receiving body : LWDD L-13 Canal
   Control elev : 14.5 feet NAVD 88.

   Basin: South Basin, Structure: CS-3

   1-4' WIDE SHARP CRESTED weir with crest at elev. 17.65' NAVD 88.
   1-1.2' W X .8' H RECTANGULAR ORIFICE with invert at elev. 14.5' NAVD 88.

   Receiving body : LWDD E-2W Canal
   Control elev : 14.5 feet NAVD 88.

4. Prior to the commencement of construction and pursuant to Section 4.2.3(d)(3) of Applicant's Handbook Volume I, the permittee shall demonstrate ownership of the project area to the District's Environmental Resource Compliance staff.

5. Lake side slopes shall be no steeper than 4:1 (horizontal:vertical) to a depth of two feet below the control elevation. Side slopes shall be nurtured or planted from 2 feet below to 1 foot above control elevation to insure vegetative growth, unless shown on the plans.

6. No construction is authorized until such time as the permittee acquires title to all the land within the proposed construction project.

7. A stable, permanent and accessible elevation reference shall be established on or within one hundred (100) feet of all permitted discharge structures no later than the submission of the certification report. The location of the elevation reference must be noted on or with the certification report.

8. The following are exhibits to this permit:

   Exhibit No. 1 Location Map
   Exhibit No. 2 Land Use Tables

SPECIAL CONDITIONS

Exhibit No. 3 Conceptual Site Plans & Pollution Prevention Plans

9. Prior to initiating construction activities associated with this Environmental Resource Permit (ERP), the permittee is required to hold a pre-construction meeting with field representatives, consultants, contractors, District Environmental Resource Compliance (ERC) staff, and any other local government entities as necessary.

   The purpose of the pre-construction meeting is to discuss construction methods, sequencing, best management practices, identify work areas, staking and roping of preserves where applicable, and to facilitate coordination and assistance amongst relevant parties.

   To schedule a pre-construction meeting, please contact ERC staff from the West Palm Beach Office at (561) 686-8800 or via e-mail at: pre-con@sfwmd.gov. When sending a request for a pre-construction meeting, please include the application number, permit number, and contact name and phone number.

10. Minimum building floor elevation: BASIN: North Basin - 19.50 feet NAVD 88.
    BASIN: South Basin - 19.30 feet NAVD 88.

11. Minimum road crown elevation: Basin: North Basin - 17.70 feet NAVD 88.
    Basin: South Basin - 17.50 feet NAVD 88.

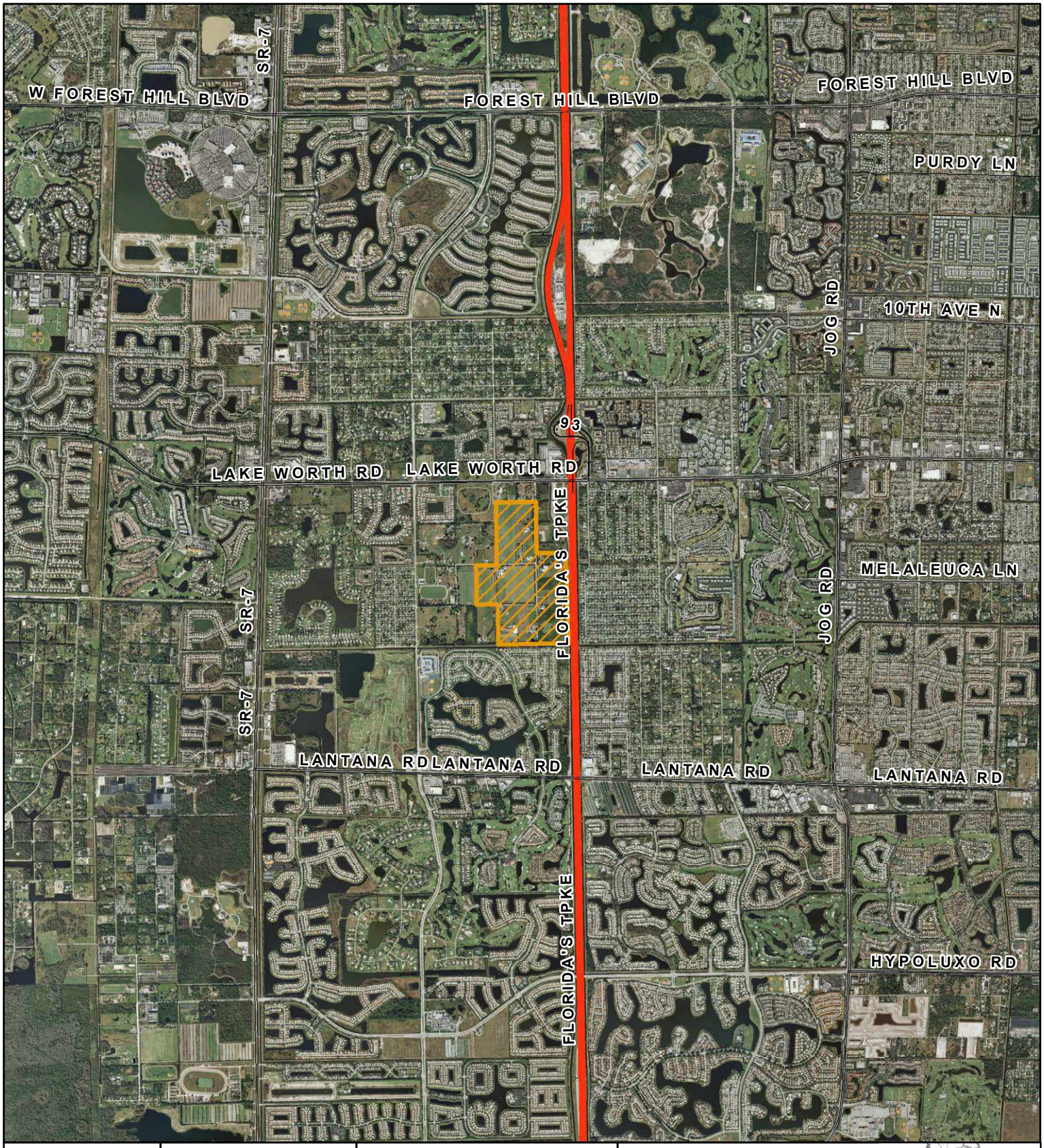

Exhibit No: 1	Exhibit Created On: 2016-03-02	PALM BEACH COUNTY, FL

REGULATION DIVISION

Project Name: GULFSTREAM POLO PROPERTIES P U D

0 0.5 1 Miles

N

Application

Permit No: 50-11013-P

Application Number: 160215-23

Created by

South Florida Water Management District

Gulfstream Polo PUD
15-Jan-2016
Overall Land Use Breakdown

Table 1 - Residential Lots - North Basin

Residential Lots	# of lots	Building Footprint (SF per lot)	Building Footprint Total (Acres)	Patio / Other Impervious (SF per lot)	Patio / Other Impervious Total (Acres)	Driveway (SF per lot)	Driveway Total (Acres)
45' wide lots	35	2625	2.11	250	0.20	450	0.36
50' wide lots	15	3300	1.14	380	0.13	450	0.15
70' wide lots	13	4000	1.19	1000	0.30	565	0.17
20' townhomes	70	1120	1.80	260	0.42	450	0.72
24' townhomes	118	1320	3.58	300	0.81	450	1.22
28' townhomes	66	1540	2.33	340	0.52	450	0.68
Total	317		12.15		2.38		3.31

Table 2 -Land Use Summary - North Basin

Land Use	Total Acres	Building Footprint (ac.)	Other Impervious (acres)	Pervious (acres)
Rec. Tract	1.38	0.15	0.5	0.73
Civic	5.02	1.25	3.02	0.75
Residential Lots	26.59	12.15	5.68	8.76
Lake	8.1	0	8.1	0
Lake Bank	3.99	0	0	3.99
Open Space	11.49	2.15	0.11	9.23
Polo Road	4.71	0	3.21	1.50
Road R/W	16.77	0	13.2	3.57
Buffers	1.91	0	0.35	1.56
Total	79.96	15.70	34.17	30.09

Table 3 - Residential Lots - South Basin

Residential Lots	# of lots	Building Footprint (SF per lot)	Building Footprint Total (Acres)	Patio / Other Impervious (SF per lot)	Patio / Other Impervious Total (Acres)	Driveway (SF per lot)	Driveway Total (Acres)
45' wide lots	207	2625	12.47	250	1.19	450	2.14
50' wide lots	113	3300	8.56	380	0.99	450	1.17
70' wide lots	65	4000	5.97	1000	1.49	565	0.84
20' townhomes	0	1120	0.00	260	0.00	450	0.00
24' townhomes	145	1320	4.39	300	1.00	450	1.50
28' townhomes	131	1540	4.63	340	1.02	450	1.35
Total	661		36.03		5.69		7.00

Table 4 -Land Use Summary - South Basin

Land Use	Total Acres	Building Footprint (ac.)	Other Impervious (acres)	Pervious (acres)
Rec. Tract	3.59	0.4	2	1.19
Civic	0	0	0	0.00
Residential Lots	75.36	36.03	12.69	26.64
Lake	25.42	0	25.42	0
Lake Bank	9.68	0	0	9.68
Open Space	10.33	0	0.12	10.21
Polo Road	3.88	0	1.53	2.35
Road R/W	24.41	0	18.77	5.64
Buffers	5.3	0	0.44	4.86
Total	157.97	36.43	60.97	60.57

Scanned 02/17/2016 10:57 SH

Gulfstream Polo PUD
15-Jan-2016
Basin N1 Land Use Breakdown

Table 1 - Residential Lots

Residential Lots	# of lots	Building Footprint (SF per lot)	Building Footprint Total (Acres)	Patio / Other Impervious (SF per lot)	Patio / Other Impervious Total (Acres)	Driveway (SF per lot)	Driveway Total (Acres)
45' wide lots	0	2625	0.00	250	0.00	450	0.00
50' wide lots	0	3300	0.00	380	0.00	450	0.00
70' wide lots	0	4000	0.00	1000	0.00	565	0.00
20' townhomes	0	1120	0.00	260	0.00	450	0.00
24' townhomes	58	1320	1.76	300	0.40	450	0.60
28' townhomes	0	1540	0.00	340	0.00	450	0.00
Total	58		1.76		0.40		0.60

Table 2 -Land Use Summary

Land Use	Total Acres	Building Footprint (ac.)	Other Impervious (acres)	Pervious (acres)
Rec. Tract	0	0.00	0.00	0.00
Civic	5.02	1.25	3.02	0.75
Residential Lots	4.17	1.76	1.00	1.41
Lake	1.36	0	1.36	0
Lake Bank	0.88	0	0	0.88
Open Space	2.27	0.00	0.11	2.16
Polo Road	0	0	0.00	0.00
Road R/W	2.16	0	1.68	0.48
Buffers	0.38	0	0.06	0.32
Total	16.24	3.01	7.23	6.00

Scanned 02/17/2016 10:57 SH

Gulfstream Polo PUD
15-Jan-2016
Basin N2 Land Use Breakdown

Table 1 - Residential Lots

Residential Lots	# of lots	Building Footprint (SF per lot)	Building Footprint Total (Acres)	Patio / Other Impervious (SF per lot)	Patio / Other Impervious Total (Acres)	Driveway (SF per lot)	Driveway Total (Acres)
45' wide lots	0	2625	0.00	250	0.00	450	0.00
50' wide lots	0	3300	0.00	380	0.00	450	0.00
70' wide lots	0	4000	0.00	1000	0.00	565	0.00
20' townhomes	0	1120	0.00	260	0.00	450	0.00
24' townhomes	0	1320	0.00	300	0.00	450	0.00
28' townhomes	2	1540	0.07	340	0.02	450	0.02
Total	2		0.07		0.02		0.02

Table 2 -Land Use Summary

Land Use	Total Acres	Building Footprint (ac.)	Other Impervious (acres)	Pervious (acres)
Rec. Tract	1.38	0.15	0.50	0.73
Civic	0.00	0.00	0	0.00
Residential Lots	0.24	0.07	0.04	0.13
Lake	1.23	0	1.23	0
Lake Bank	0.82	0	0	0.82
Open Space	0.24	0.00	0.00	0.24
Polo Road	4.71	0	3.21	1.50
Road R/W	1.01	0	0.67	0.34
Buffers	0.7	0	0.11	0.59
Total	10.33	0.22	5.76	4.35

Scanned 02/17/2016 10:57 SH

Gulfstream Polo PUD
15-Jan-2016
Basin N3 Land Use Breakdown

Table 1 - Residential Lots

Residential Lots	# of lots	Building Footprint (SF per lot)	Building Footprint Total (Acres)	Patio / Other Impervious (SF per lot)	Patio / Other Impervious Total (Acres)	Driveway (SF per lot)	Driveway Total (Acres)
45' wide lots	35	2625	2.11	250	0.20	450	0.36
50' wide lots	15	3300	1.14	380	0.13	450	0.15
70' wide lots	13	4000	1.19	1000	0.30	565	0.17
20' townhomes	70	1120	1.80	260	0.42	450	0.72
24' townhomes	60	1320	1.82	300	0.41	450	0.62
28' townhomes	64	1540	2.26	340	0.50	450	0.66
Total	257		10.32		1.96		2.69

Table 2 -Land Use Summary

Land Use	Total Acres	Building Footprint (ac.)	Other Impervious (acres)	Pervious (acres)
Rec. Tract	0	0.00	0.00	0.00
Civic	0.00	0.00	0	0.00
Residential Lots	22.18	10.32	4.65	7.21
Lake	4.90	0	4.90	0
Lake Bank	1.83	0	0	1.83
Open Space	5.61	0	0.00	5.61
Polo Road	0	0	0.00	0.00
Road R/W	9.57	0	6.82	2.75
Buffers	0.83	0	0.18	0.65
Total	44.92	10.32	16.55	18.05

Scanned 02/17/2016 10:57 AM

Gulfstream Polo PUD
15-Jan-2016
Basin N4 Land Use Breakdown

Table 1 - Residential Lots

Residential Lots	# of lots	Building Footprint (SF per lot)	Building Footprint Total (Acres)	Patio / Other Impervious (SF per lot)	Patio / Other Impervious Total (Acres)	Driveway (SF per lot)	Driveway Total (Acres)
45' wide lots	0	2625	0.00	250	0.00	450	0.00
50' wide lots	0	3300	0.00	380	0.00	450	0.00
70' wide lots	0	4000	0.00	1000	0.00	565	0.00
20' townhomes	0	1120	0.00	260	0.00	450	0.00
24' townhomes	0	1320	0.00	300	0.00	450	0.00
28' townhomes	0	1540	0.00	340	0.00	450	0.00
Total	0		0.00		0.00		0.00

Table 2 -Land Use Summary

Land Use	Total Acres	Building Footprint (ac.)	Other Impervious (acres)	Pervious (acres)
Rec. Tract	0	0.00	0.00	0.00
Civic	0.00	0.00	0	0.00
Residential Lots	0	0.00	0.00	0.00
Lake	0.61	0	0.61	0
Lake Bank	0.46	0	0	0.46
Open Space	3.37	2.15	0.00	1.22
Polo Road	0	0	0.00	0.00
Road R/W	4.03	0	4.03	0.00
Buffers	0	0	0.00	0.00
Total	8.47	2.15	4.64	1.68

Scanned 02/17/2016 10:57 SH

Gulfstream Polo PUD
15-Jan-2016
Basin S1 Land Use Breakdown

Table 1 - Residential Lots

Residential Lots	# of lots	Building Footprint (SF per lot)	Building Footprint Total (Acres)	Patio / Other Impervious (SF per lot)	Patio / Other Impervious Total (Acres)	Driveway (SF per lot)	Driveway Total (Acres)
45' wide lots	27	2625	1.63	250	0.15	450	0.28
50' wide lots	0	3300	0.00	380	0.00	450	0.00
70' wide lots	0	4000	0.00	1000	0.00	565	0.00
20' townhomes	0	1120	0.00	260	0.00	450	0.00
24' townhomes	7	1320	0.21	300	0.05	450	0.07
28' townhomes	28	1540	0.99	340	0.22	450	0.29
Total	62		2.83		0.42		0.64

Table 2 -Land Use Summary

Land Use	Total Acres	Building Footprint (ac.)	Other Impervious (acres)	Pervious (acres)
Rec. Tract	0	0.00	0.00	0.00
Civic	0.00	0.00	0	0.00
Residential Lots	5.94	2.83	1.06	2.05
Lake	1.56	0	1.56	0
Lake Bank	0.84	0	0	0.84
Open Space	1.69	0.00	0.00	1.69
Polo Road	1.09	0	0.42	0.67
Road R/W	2.93	0	2.21	0.72
Buffers	0.89	0	0.16	0.73
Total	14.94	2.83	5.41	6.70

Scanned 02/17/2016 10:57 SH

Gulfstream Polo PUD
15-Jan-2016
Basin S2 Land Use Breakdown

Table 1 - Residential Lots

Residential Lots	# of lots	Building Footprint (SF per lot)	Building Footprint Total (Acres)	Patio / Other Impervious (SF per lot)	Patio / Other Impervious Total (Acres)	Driveway (SF per lot)	Driveway Total (Acres)
45' wide lots	34	2625	2.05	250	0.20	450	0.35
50' wide lots	0	3300	0.00	380	0.00	450	0.00
70' wide lots	0	4000	0.00	1000	0.00	565	0.00
20' townhomes	0	1120	0.00	260	0.00	450	0.00
24' townhomes	6	1320	0.18	300	0.04	450	0.06
28' townhomes	45	1540	1.59	340	0.35	450	0.46
Total	85		3.82		0.59		0.88

Table 2 -Land Use Summary

Land Use	Total Acres	Building Footprint (ac.)	Other Impervious (acres)	Pervious (acres)
Rec. Tract	0.56	0.10	0.31	0.15
Civic	0.00	0.00	0	0.00
Residential Lots	7.88	3.82	1.47	2.59
Lake	1.65	0	1.65	0
Lake Bank	0.84	0	0	0.84
Open Space	2.83	0.00	0.00	2.83
Polo Road	2.79	0	1.11	1.68
Road R/W	4.26	0	3.22	1.04
Buffers	1.25	0	0.22	1.03
Total	22.06	3.92	7.98	10.16

Scanned 02/17/2016 10:57 SH

Gulfstream Polo PUD
15-Jan-2016
Basin S3 Land Use Breakdown

Table 1 - Residential Lots

Residential Lots	# of lots	Building Footprint (SF per lot)	Building Footprint Total (Acres)	Patio / Other Impervious (SF per lot)	Patio / Other Impervious Total (Acres)	Driveway (SF per lot)	Driveway Total (Acres)
45' wide lots	10	2625	0.60	250	0.06	450	0.10
50' wide lots	15	3300	1.14	380	0.13	450	0.15
70' wide lots	0	4000	0.00	1000	0.00	565	0.00
20' townhomes	0	1120	0.00	260	0.00	450	0.00
24' townhomes	27	1320	0.82	300	0.19	450	0.28
28' townhomes	18	1540	0.64	340	0.14	450	0.19
Total	70		3.19		0.51		0.72

Table 2 -Land Use Summary

Land Use	Total Acres	Building Footprint (ac.)	Other Impervious (acres)	Pervious (acres)
Rec. Tract	0	0.00	0.00	0.00
Civic	0.00	0.00	0	0.00
Residential Lots	6.59	3.19	1.24	2.16
Lake	3.27	0	3.27	0
Lake Bank	1.16	0	0	1.16
Open Space	0.55	0.00	0.00	0.55
Polo Road	0	0	0.00	0.00
Road R/W	2.42	0	1.86	0.56
Buffers	0	0	0.00	0.00
Total	13.99	3.19	6.37	4.43

Scanned 02/17/2016 10:57 SH

Gulfstream Polo PUD
15-Jan-2016
Basin S4 Land Use Breakdown

Table 1 - Residential Lots

Residential Lots	# of lots	Building Footprint (SF per lot)	Building Footprint Total (Acres)	Patio / Other Impervious (SF per lot)	Patio / Other Impervious Total (Acres)	Driveway (SF per lot)	Driveway Total (Acres)
45' wide lots	0	2625	0.00	250	0.00	450	0.00
50' wide lots	0	3300	0.00	380	0.00	450	0.00
70' wide lots	0	4000	0.00	1000	0.00	565	0.00
20' townhomes	0	1120	0.00	260	0.00	450	0.00
24' townhomes	74	1320	2.24	300	0.51	450	0.76
28' townhomes	23	1540	0.81	340	0.18	450	0.24
Total	97		3.06		0.69		1.00

Table 2 -Land Use Summary

Land Use	Total Acres	Building Footprint (ac.)	Other Impervious (acres)	Pervious (acres)
Rec. Tract	0	0.00	0.00	0.00
Civic	0.00	0.00	0	0.00
Residential Lots	6.84	3.06	1.69	2.09
Lake	1.97	0	1.97	0
Lake Bank	0.99	0	0	0.99
Open Space	0.78	0.00	0.00	0.78
Polo Road	0	0	0.00	0.00
Road R/W	1.96	0	1.63	0.33
Buffers	0	0	0.00	0.00
Total	12.54	3.06	5.29	4.19

Scanned 02/17/2016 10:57 SH

Gulfstream Polo PUD
15-Jan-2016
Basin S5 Land Use Breakdown

Table 1 - Residential Lots

Residential Lots	# of lots	Building Footprint (SF per lot)	Building Footprint Total (Acres)	Patio / Other Impervious (SF per lot)	Patio / Other Impervious Total (Acres)	Driveway (SF per lot)	Driveway Total (Acres)
45' wide lots	44	2625	2.65	250	0.25	450	0.45
50' wide lots	5	3300	0.38	380	0.04	450	0.05
70' wide lots	0	4000	0.00	1000	0.00	565	0.00
20' townhomes	0	1120	0.00	260	0.00	450	0.00
24' townhomes	17	1320	0.52	300	0.12	450	0.18
28' townhomes	5	1540	0.18	340	0.04	450	0.05
Total	71		3.72		0.45		0.73

Table 2 -Land Use Summary

Land Use	Total Acres	Building Footprint (ac.)	Other Impervious (acres)	Pervious (acres)
Rec. Tract	0	0.00	0.00	0.00
Civic	0.00	0.00	0	0.00
Residential Lots	7.52	3.72	1.19	2.61
Lake	1.06	0	1.06	0
Lake Bank	0.8	0	0	0.80
Open Space	0.54	0.00	0.00	0.54
Polo Road	0	0	0.00	0.00
Road R/W	1.81	0	1.45	0.36
Buffers	1.07	0	0.00	1.07
Total	12.8	3.72	3.70	5.38

Scanned 02/17/2016 10:57 AM

Gulfstream Polo PUD
15-Jan-2016
Basin S6 Land Use Breakdown

Table 1 - Residential Lots

Residential Lots	# of lots	Building Footprint (SF per lot)	Building Footprint Total (Acres)	Patio / Other Impervious (SF per lot)	Patio / Other Impervious Total (Acres)	Driveway (SF per lot)	Driveway Total (Acres)
45' wide lots	32	2625	1.93	250	0.18	450	0.33
50' wide lots	15	3300	1.14	380	0.13	450	0.15
70' wide lots	4	4000	0.37	1000	0.09	565	0.05
20' townhomes	0	1120	0.00	260	0.00	450	0.00
24' townhomes	7	1320	0.21	300	0.05	450	0.07
28' townhomes	0	1540	0.00	340	0.00	450	0.00
Total	58		3.64		0.45		0.61

Table 2 -Land Use Summary

Land Use	Total Acres	Building Footprint (ac.)	Other Impervious (acres)	Pervious (acres)
Rec. Tract	2.38	0.20	1.34	0.84
Civic	0.00	0.00	0	0.00
Residential Lots	7.3	3.64	1.06	2.59
Lake	5.91	0	5.91	0
Lake Bank	1.55	0	0	1.55
Open Space	0.16	0.00	0.00	0.16
Polo Road	0	0	0.00	0.00
Road R/W	2.34	0	1.75	0.59
Buffers	0	0	0.00	0.00
Total	19.64	3.84	10.06	5.73

Scanned 02/17/2016 10:57 SH

Gulfstream Polo PUD
15-Jan-2016
Basin S7 Land Use Breakdown

Table 1 - Residential Lots

Residential Lots	# of lots	Building Footprint (SF per lot)	Building Footprint Total (Acres)	Patio / Other Impervious (SF per lot)	Patio / Other Impervious Total (Acres)	Driveway (SF per lot)	Driveway Total (Acres)
45' wide lots	0	2625	0.00	250	0.00	450	0.00
50' wide lots	21	3300	1.59	380	0.18	450	0.22
70' wide lots	39	4000	3.58	1000	0.90	565	0.51
20' townhomes	0	1120	0.00	260	0.00	450	0.00
24' townhomes	0	1320	0.00	300	0.00	450	0.00
28' townhomes	0	1540	0.00	340	0.00	450	0.00
Total	60		5.17		1.08		0.72

Table 2 -Land Use Summary

Land Use	Total Acres	Building Footprint (ac.)	Other Impervious (acres)	Pervious (acres)
Rec. Tract	0.65	0.10	0.35	0.20
Civic	0.00	0.00	0	0.00
Residential Lots	11.58	5.17	1.80	4.61
Lake	1.53	0	1.53	0
Lake Bank	0.81	0	0	0.81
Open Space	1.23	0.00	0.00	1.23
Polo Road	0	0	0.00	0.00
Road R/W	3.07	0	2.26	0.81
Buffers	0.31	0	0.06	0.25
Total	19.18	5.27	6.00	7.91

Scanned 02/17/2016 10:57 SH

Gulfstream Polo PUD
15-Jan-2016
Basin S8 Land Use Breakdown

Table 1 - Residential Lots

Residential Lots	# of lots	Building Footprint (SF per lot)	Building Footprint Total (Acres)	Patio / Other Impervious (SF per lot)	Patio / Other Impervious Total (Acres)	Driveway (SF per lot)	Driveway Total (Acres)
45' wide lots	0	2625	0.00	250	0.00	450	0.00
50' wide lots	10	3300	0.76	380	0.09	450	0.10
70' wide lots	22	4000	2.02	1000	0.51	565	0.29
20' townhomes	0	1120	0.00	260	0.00	450	0.00
24' townhomes	0	1320	0.00	300	0.00	450	0.00
28' townhomes	0	1540	0.00	340	0.00	450	0.00
Total	32		2.78		0.59		0.39

Table 2 -Land Use Summary

Land Use	Total Acres	Building Footprint (ac.)	Other Impervious (acres)	Pervious (acres)
Rec. Tract	0	0.00	0.00	0.00
Civic	0.00	0.00	0	0.00
Residential Lots	6.42	2.78	0.98	2.66
Lake	1.64	0	1.64	0
Lake Bank	0.85	0	0	0.85
Open Space	0.44	0.00	0.06	0.38
Polo Road	0	0	0.00	0.00
Road R/W	1.46	0	1.07	0.39
Buffers	0	0	0.00	0.00
Total	10.81	2.78	3.75	4.28

Scanned 02/17/2016 10:57 SH

Gulfstream Polo PUD
15-Jan-2016
Basin S9 Land Use Breakdown

Table 1 - Residential Lots

Residential Lots	# of lots	Building Footprint (SF per lot)	Building Footprint Total (Acres)	Patio / Other Impervious (SF per lot)	Patio / Other Impervious Total (Acres)	Driveway (SF per lot)	Driveway Total (Acres)
45' wide lots	60	2625	3.62	250	0.34	450	0.62
50' wide lots	47	3300	3.56	380	0.41	450	0.49
70' wide lots	0	4000	0.00	1000	0.00	565	0.00
20' townhomes	0	1120	0.00	260	0.00	450	0.00
24' townhomes	7	1320	0.21	300	0.05	450	0.07
28' townhomes	12	1540	0.42	340	0.09	450	0.12
Total	126		7.81		0.90		1.30

Table 2 -Land Use Summary

Land Use	Total Acres	Building Footprint (ac.)	Other Impervious (acres)	Pervious (acres)
Rec. Tract	0	0.00	0.00	0.00
Civic	0.00	0.00	0	0.00
Residential Lots	15.29	7.81	2.20	5.28
Lake	6.83	0	6.83	0
Lake Bank	1.84	0	0	1.84
Open Space	2.11	0.00	0.06	2.05
Polo Road	0	0	0.00	0.00
Road R/W	4.16	0	3.32	0.84
Buffers	1.78	0	0.00	1.78
Total	32.01	7.81	12.41	11.79

Scanned 02/17/2016 10:57 SH

PROJECT NO. 14132
January 2016

MASTER SURFACE WATER MANAGEMENT PLANS
FOR

Gulfstream Polo Properties PUD

Palm Beach County, Florida

LEGAL DESCRIPTION

PARCEL 1

A PORTION OF TRACTS 37 AND 44, BLOCK 28, PALM BEACH FARMS CO. PLAT NO. 3, AS RECORDED IN PLAT BOOK 2, PAGES 45 THROUGH 54 OF THE PUBLIC RECORDS OF PALM BEACH COUNTY, FLORIDA, MORE PARTICULARLY DESCRIBED AS FOLLOWS:

BEGINNING AT THE SOUTHEAST CORNER OF SAID TRACT 44; THENCE S.89°03'30"W. ALONG THE SOUTH LINE THEREOF, A DISTANCE OF 352.20 FEET TO THE POINT OF CURVATURE OF A NON TANGENT CURVE TO THE RIGHT, OF WHICH THE RADIUS POINT LIES N.00°28'31"W., A RADIAL DISTANCE OF 460.00 FEET; THENCE WESTERLY ALONG THE ARC, THROUGH A CENTRAL ANGLE OF 14°39'56", A DISTANCE OF 117.74 FEET; THENCE N.75°48'35"W., A DISTANCE OF 58.77 FEET TO A POINT OF CURVATURE TO THE LEFT HAVING A RADIUS OF 540.00 FEET AND A CENTRAL ANGLE OF 14°27'05"; THENCE WESTERLY ALONG THE ARC, A DISTANCE OF 136.20 FEET TO A POINT OF INTERSECTION WITH THE WEST LINE OF SAID TRACT 44; THENCE N.00°56'30"W. ALONG THE WEST LINE OF SAID TRACTS 37 AND 44, A DISTANCE OF 1,234.43 FEET TO A POINT OF INTERSECTION WITH THE SOUTH RIGHT-OF-WAY LINE OF THE LAKE WORTH DRAINAGE DISTRICT L-13 CANAL, AS RECORDED IN OFFICIAL RECORD BOOK 6495, PAGE 761 OF SAID PUBLIC RECORDS, SAID RIGHT-OF-WAY LINE BEING 35.64 FEET SOUTH OF (AS MEASURED AT RIGHT ANGLES TO) AND PARALLEL WITH THE NORTH LINE OF SAID TRACT 37; THENCE N.89°03'30"E. ALONG SAID RIGHT-OF-WAY LINE, A DISTANCE OF 659.82 FEET TO A POINT OF INTERSECTION WITH THE EAST LINE OF SAID TRACT 37; THENCE S.00°56'30"E. ALONG THE EAST LINE OF SAID TRACTS 37 AND 44, A DISTANCE OF 1,284.39 FEET TO THE POINT OF BEGINNING.

TOGETHER WITH:

PARCEL 2

ALL OF TRACTS 14, 19, 20, 29 AND 30, TOGETHER WITH A PORTION OF TRACTS 13, 31 AND 32, TOGETHER WITH ALL THAT PORTION OF THE 30 FOOT WIDE RIGHT-OF-WAY LYING BETWEEN SAID TRACTS 13, 14 AND 19, 20, ALL IN BLOCK 28, PALM BEACH FARMS CO. PLAT NO. 3, AS RECORDED IN PLAT BOOK 2, PAGE 45 THROUGH 54 OF THE PUBLIC RECORDS OF PALM BEACH COUNTY, FLORIDA, MORE PARTICULARLY DESCRIBED AS FOLLOWS

BEGINNING AT THE SOUTHWEST CORNER OF SAID TRACT 29; THENCE N.00°56'30"W. ALONG THE WEST LINE OF SAID TRACTS 13, 20 AND 29, A DISTANCE OF 1,960.00 FEET; THENCE N.89°03'30"E ALONG A LINE 50.00 FEET SOUTH OF (AS MEASURED AT RIGHT ANGLES TO) AND PARALLEL WITH THE NORTH LINE OF SAID TRACT 13, A DISTANCE OF 100.00 FEET; THENCE N.00°56'30"W. ALONG A LINE 100.00 FEET EAST OF (AS MEASURED AT RIGHT ANGLES TO) AND PARALLEL WITH THE WEST LINE OF SAID TRACT 13, A DISTANCE OF 50.00 FEET TO A POINT OF INTERSECTION WITH THE NORTH LINE OF SAID TRACT 13; THENCE N.89°03'30"E. ALONG THE NORTH LINE OF SAID TRACTS 13 AND 14, A DISTANCE OF 1,219.64 FEET TO THE NORTHEAST CORNER OF SAID TRACT 14; THENCE S.00°56'30"E. ALONG THE EAST LINE OF SAID TRACTS 14, 19 AND 30, A DISTANCE OF 1680.00 FEET; THENCE N.89°03'30"E. ALONG THE NORTH LINE OF THE SOUTH ONE-HALF OF SAID TRACTS 31 AND 32, A DISTANCE OF 952.25 FEET TO A POINT OF INTERSECTION WITH THE WEST RIGHT-OF-WAY LINE OF THE LAKE WORTH DRAINAGE DISTRICT E-2W CANAL, AS RECORDED IN OFFICIAL RECORD BOOK 24358, PAGE 1059 OF SAID PUBLIC RECORDS, AND THE POINT OF CURVATURE OF A NON TANGENT CURVE TO THE LEFT, OF WHICH THE RADIUS POINT LIES N.88°51'16"E., A RADIAL DISTANCE OF 11,602.25 FEET; THENCE SOUTHERLY ALONG THE ARC OF SAID RIGHT-OF-WAY LINE, THROUGH A CENTRAL ANGLE OF 01°37'48", A DISTANCE OF 330.05 FEET TO A POINT OF INTERSECTION WITH THE SOUTH LINE OF SAID TRACT 32; THENCE S.89°03'30"W. ALONG THE SOUTH LINE OF SAID TRACTS 29, 30, 31 AND 32, A DISTANCE OF 2,277.76 FEET TO THE POINT OF BEGINNING.

TOGETHER WITH:

PARCEL 3

ALL OF TRACTS 45, 46, 47, 50, 51 AND 52, TOGETHER WITH A PORTION OF TRACTS 33, 34, 35, 36, 48, 49, 61, 62, 63 AND 64, TOGETHER WITH ALL THAT PORTION OF THE 30 FOOT WIDE RIGHT-OF-WAY LYING BETWEEN SAID TRACTS 45 THROUGH 48 AND 49 THROUGH 52, TOGETHER WITH THE EAST ONE-HALF OF THE 30 FOOT RIGHT-OF-WAY LYING WEST OF AND ADJACENT TO SAID TRACTS 52 AND 61, ALL IN BLOCK 28, PALM BEACH FARMS CO. PLAT NO. 3, ACCORDING TO THE PLAT THEREOF, AS RECORDED IN PLAT BOOK 2, PAGE 45 THROUGH 54 OF THE PUBLIC RECORDS OF PALM BEACH COUNTY, FLORIDA, MORE PARTICULARLY DESCRIBED AS FOLLOWS

COMMENCING AT THE NORTHWEST CORNER OF SAID TRACT 36; THENCE S.00°56'30"E. ALONG THE WEST LINE THEREOF, A DISTANCE OF 43.56 FEET TO A POINT OF INTERSECTION WITH THE SOUTH RIGHT-OF-WAY LINE OF THE LAKE WORTH DRAINAGE DISTRICT L-13 CANAL, AS RECORDED IN OFFICIAL RECORD BOOK 6495, PAGE 761 OF SAID PUBLIC RECORDS, SAID RIGHT-OF-WAY LINE BEING 43.56 FEET SOUTH OF (AS MEASURED AT RIGHT ANGLES TO) AND PARALLEL WITH THE NORTH LINE OF SAID TRACT 36, AND THE POINT OF BEGINNING; THENCE N.89°03'30"E. ALONG SAID RIGHT-OF-WAY LINE, A DISTANCE OF 659.82 FEET TO A POINT OF INTERSECTION WITH THE EAST LINE OF SAID TRACT 36; THENCE S.00°56'30"E. ALONG THE EAST LINE OF SAID TRACT 36, AND THE SOUTH RIGHT-OF-WAY LINE OF SAID L-13 CANAL, A DISTANCE OF 2.64 FEET; THENCE N.89°03'30"E. ALONG THE SOUTH RIGHT-OF-WAY LINE OF SAID L-13 CANAL, SAID RIGHT-OF-WAY LINE BEING 46.20 FEET SOUTH OF (AS MEASURED AT RIGHT ANGLES TO) AND PARALLEL WITH THE NORTH LINE OF SAID TRACTS 33, 34 AND 35, A DISTANCE OF 1,620.63 FEET TO A POINT OF INTERSECTION WITH THE WEST RIGHT-OF-WAY LINE OF THE LAKE WORTH DRAINAGE DISTRICT E-2W CANAL, AS RECORDED IN OFFICIAL RECORD BOOK 24358, PAGE 1059 OF SAID PUBLIC RECORDS, AND THE POINT OF CURVE OF A NON TANGENT CURVE TO THE LEFT, OF WHICH THE RADIUS POINT LIES N.86°50'53"E., A RADIAL DISTANCE OF 11,602.25 FEET; THENCE SOUTHERLY ALONG THE ARC OF SAID RIGHT-OF-WAY LINE, THROUGH A CENTRAL ANGLE OF 00°40'12", A DISTANCE OF 135.66 FEET TO A POINT OF REVERSE CURVE TO THE RIGHT HAVING A RADIUS OF 7,495.75 FEET AND A CENTRAL ANGLE OF 02°48'44"; THENCE SOUTHERLY ALONG THE ARC OF SAID RIGHT-OF-WAY LINE, A DISTANCE OF 367.91 FEET; THENCE S.08°57'50"E. ALONG SAID RIGHT-OF-WAY LINE, A DISTANCE OF 111.68 FEET TO A POINT OF INTERSECTION WITH THE WEST RIGHT-OF-WAY LINE OF FLORIDA'S TURNPIKE, AS RECORDED IN ROAD PLAT BOOK 11, PAGES 54 THROUGH 59 OF SAID PUBLIC RECORDS; THENCE S.00°58'26"E., A DISTANCE OF 1,974.96 FEET TO A POINT OF INTERSECTION WITH NORTH RIGHT-OF-WAY LINE OF THE LAKE WORTH DRAINAGE DISTRICT L-14 CANAL, AS RECORDED IN OFFICIAL RECORD BOOK 6495, PAGE 761 OF SAID PUBLIC RECORDS, SAID RIGHT-OF-WAY LINE BEING 34.98 FEET NORTH OF (AS MEASURED AT RIGHT ANGLES TO) AND PARALLEL WITH THE SOUTH LINE OF SAID TRACTS 61 THROUGH 64; THENCE S.89°03'30"W. ALONG SAID RIGHT-OF-WAY LINE, A DISTANCE OF 2,327.64 FEET TO A POINT OF INTERSECTION WITH THE CENTERLINE OF THAT CERTAIN 30 FOOT WIDE RIGHT-OF-WAY LYING WEST OF AND ADJACENT TO SAID TRACTS 52 AND 61; THENCE N.00°56'30"W. ALONG SAID CENTERLINE, A DISTANCE OF 1,284.99 FEET TO A POINT OF INTERSECTION WITH THE WESTERLY EXTENSION OF THE NORTH LINE OF SAID TRACT 52; THENCE N.89°03'30"E., A DISTANCE OF 15.00 FEET TO THE NORTHWEST CORNER OF SAID TRACT 52; THENCE N.00°56'30"W. ALONG THE WEST LINE OF SAID TRACTS 36 AND 45, A DISTANCE OF 1,306.47 FEET TO THE POINT OF BEGINNING.

SAID LANDS SITUATE IN PALM BEACH COUNTY, FLORIDA.
CONTAINING 9,796,718 SQUARE FEET/224.902 ACRES MORE OR LESS.

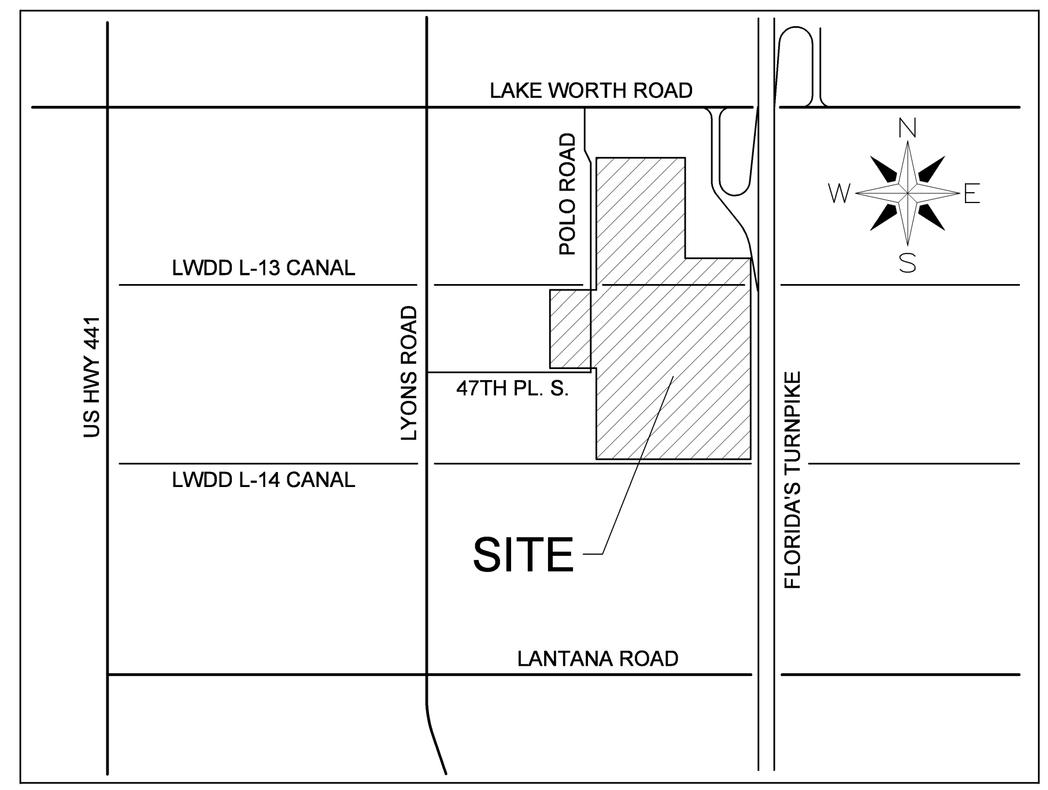

LOCATION MAP
SEC 29, TWP 44S, RGE 42E
NOT TO SCALE

INDEX OF SHEETS

SHEET DESCRIPTION	SHEET NO.
MASTER SURFACE WATER MANAGEMENT PLAN	1
CONSTRUCTION PERIOD STORMWATER POLLUTION PREVENTION PLAN	2
CONSTRUCTION PERIOD STORMWATER POLLUTION PREVENTION DETAILS	3
CONSTRUCTION DETAILS	4 - 6
CONSTRUCTION DEWATERING PLAN	7

OWNER:
PULTE GROUP
1400 INDIAN CREEK PARKWAY
JUPITER, FL 33458

811 Know what's below. Call before you dig.

SCHNARS ENGINEERING CORPORATION
947 CLINT MOORE ROAD • BOCA RATON, FLORIDA 33487
TEL: (561) 241–6455 • FAX: (561) 241–5182
Certificate of Authorization No. 6640

SCHNARS ENGINEERING CORPORATION

Jeffrey T. Schnars, P.E.
Civil Engineer
Florida Registration No. 46697
(FOR THE FIRM)

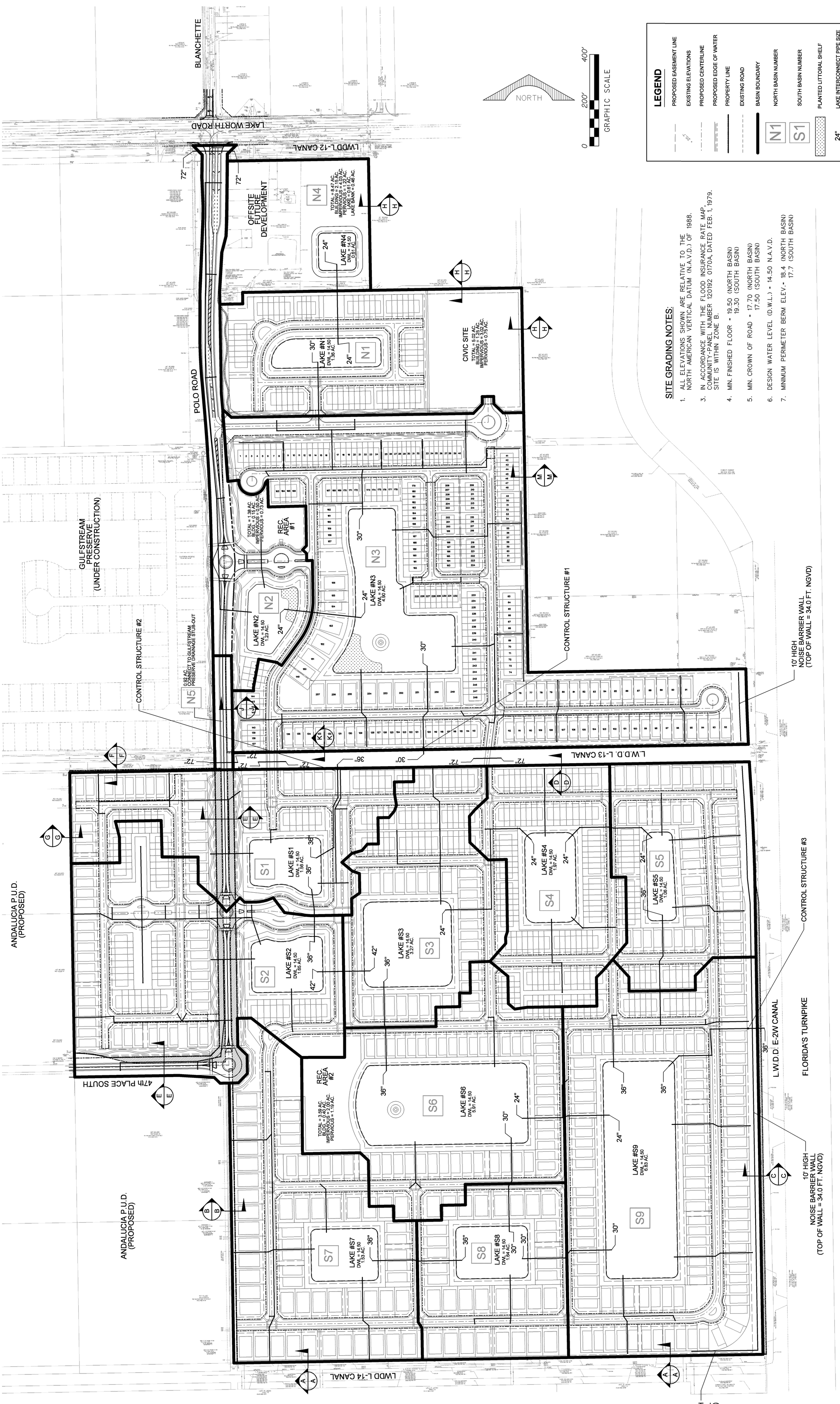

SITE GRADING NOTES:

1. ALL ELEVATIONS SHOWN ARE RELATIVE TO THE NORTH AMERICAN VERTICAL DATUM (N.A.V.D.) OF 1988.
3. IN ACCORDANCE WITH THE FLOOD INSURANCE RATE MAP, COMMUNITY-PANEL NUMBER 120192 0170A, DATED FEB. 1, 1979. SITE IS WITHIN ZONE B.
4. MIN. FINISHED FLOOR = 19.50 (NORTH BASIN) 19.30 (SOUTH BASIN)
5. MIN. CROWN OF ROAD = 17.70 (NORTH BASIN) 17.50 (SOUTH BASIN)
6. DESIGN WATER LEVEL (D.W.L.) = 14.50 N.A.V.D.
7. MINIMUM PERIMETER BERM ELEV.= 18.4 (NORTH BASIN) 17.7 (SOUTH BASIN)

JOB NO.	14132
DRAWN	RAD
DESIGNED	JTS
CHECKED	JWM
Q.C.	JTS
SHEET	1 OF 7

Jeffrey T. Schnars, P.E.
Civil Engineer
Florida Registration No. 46697
(FOR THE FIRM)

SEAL

ORIGINAL: JANUARY 2016

REVISIONS:
1
2
3
4
5
6
7
8
9
10
11
12

TASK:

PROJECT: **GULFSTREAM POLO PROPERTIES PUD**

MASTER SURFACE WATER MANAGEMENT PLAN / BASIN AREA MAP

OWNER: **PULTE HOMES CORPORATION**
1400 INDIAN CREEK PARKWAY
JUPITER, FLORIDA 33458

PALM BEACH COUNTY **FLORIDA**

SCHNARS
ENGINEERING CORPORATION
947 Clint Moore Road
Boca Raton, Florida 33487
Certificate of Authorization #6640
Tel: (561) 241-6455
Fax: (561) 241-5182

3/10/2016 5:15:06 PM $FILE$

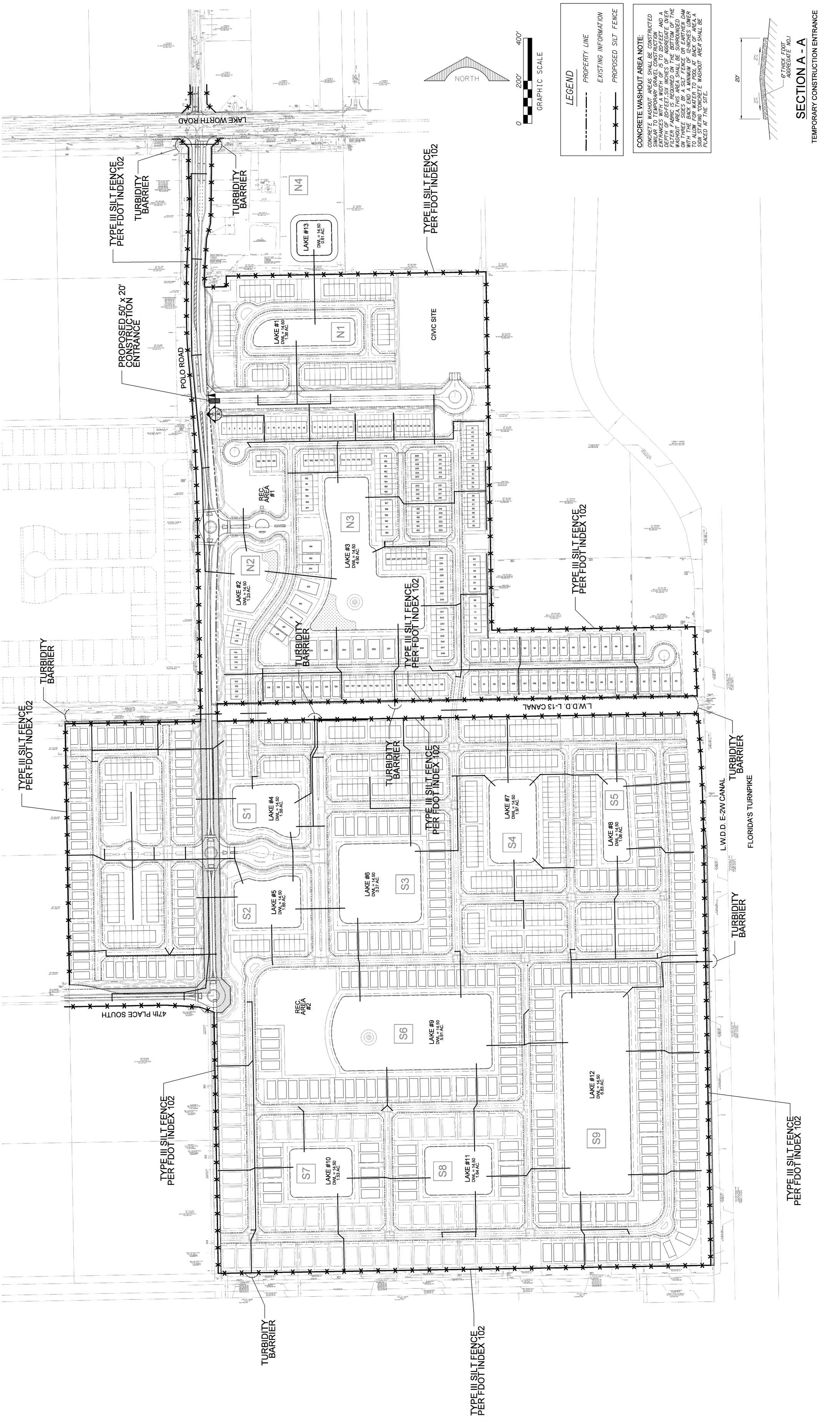

JOB NO. 14132
DRAWN RAD
DESIGNED JTS
CHECKED JWM
Q.C. JTS
SHEET 2 OF 7

Jeffrey T. Schnars, P.E.
Civil Engineer
Florida Registration No. 46697
(FOR THE FIRM)

SEAL

ORIGINAL: JANUARY 2016
REVISIONS:
1
2
3
4
5
6
7
8
9
10
11
12

TASK:

PROJECT:

CONSTRUCTION PERIOD STORMWATER POLLUTION PREVENTION PLAN

OWNER:

PULTE HOMES CORPORATION
1400 INDIAN CREEK PARKWAY
JUPITER, FLORIDA 33458

GULFSTREAM POLO PROPERTIES PUD
PALM BEACH COUNTY FLORIDA

SCHNARS
ENGINEERING CORPORATION
947 Clint Moore Road
Boca Raton, Florida 33487
Certificate of Authorization #6640
Tel: (561) 241-6455
Fax: (561) 241-5182

EROSION AND SEDIMENTATION CONTROL NOTES

1. ALL SEDIMENT CONTROL MEASURES ARE TO BE ADJUSTED TO MEET FIELD CONDITIONS AT THE TIME OF CONSTRUCTION AND BE CONSTRUCTED PRIOR TO ANY GRADING OR DISTURBANCE OF EXISTING SURGACE MATERIAL ON BALANCE OF SITE. PERIMETER SEDIMENT BARRIERS SHALL BE CONSTRUCTED TO PREVENT SEDIMENT OR TRASH FROM FLOWING OR FLOATING ON TO ADJACENT PROPERTIES.

2. SEDIMENT WILL BE PREVENTED FROM ENTERING ANY STORM DRIAN SYSTEM, DITCH OR CHANNEL. ALL STORM SEWER INLETS THAT ARE MADE OPERABLE DURING CONSTRUCTION SHALL BE PROTECTED SO THAT SEDIMENT-LADEN WATER CANNOT ENTER THE CONVEYANCE SYSTEM WITHOUT FIRST BEING FILTERED OR OTHERWISE TREATED TO REMOVE SEDIMENT.

3. BEFORE TEMPORARY OR NEWLY CONSTRUCTED STROMWATER CONVEYANCE CHANNELS ARE MADE OPERATIONAL, ADEQUATE OUTLET PROTECTION AND ANY REQUIRED TEMPORARY OR PERMANENT CHANNEL LINING SHALL BE INSTALLED IN BOTH THE CONVEYANCE CHANNEL AND RECEIVING CHANNEL.

4. PERIODIC INSPECITON AND MAINTENANCE OF ALL SEDIMENT CONTROL STRUCTURES MUST BE PROVIDED TO ENSURE INTENDED PURPOSE IS ACCOMPLISHED. THE DEVELOPER, OWNER AND/OR CONTRACTOR SHALL BE CONTINUALLY RESPONSIBLE FOR ALL SEDIMENT LEAVING THE PROPERTY. SEDIMENT CONTROL MEASURES SHALL BE IN WORKING CONDITION AT THE END OF EACH WORKING DAY.

5. WHERE CONSTRUCITON VEHICLE ACCESS ROUTES INTERSECT PAVED PUBLIC ROADS, PROVISIONS SHALL BE MADE TO MINIMIZE THE TRANSPORT OF SEDIMENT BY TRACKING ONTO THE PAVED SURFACE, WHERE SEDIMENT IS TRANSPORTED ONTO A PUBLIC ROAD SURFACE WITH CURBS AND GUTTERS, THE ROAD SHALL BE CLEANED THOROUGHLY AT THE END OF EACH DAY. SEDIMENT SHALL BE REMOVED FORM THE ROADS BY SHOVELING OR SWEEPING AND TRANSPORTED TO A SEDIMENT CONTROL DISPOSAL AREA. STREET WASHING SHALL BE ALLOWED ONLY AFTER SEDIMENT IS REMOVED IN THIS MANNER. THIS PROVISION SHALL APPLY TO INDIVIDUAL SUBDIVISION LOTS AS WELL AS TO LARGER LAND-DISTRIBUTING ACTIVITIES.

6. ALL TEMPORARY EROSION AND SEDIMENT CONTROL MEASURES SHALL BE REMOVED WITHIN 30 DAYS AFTER FINAL SITE STABILIZATION OR AFTER THE TEMPORATY MEASURES ARE NO LONGER NEEDED, IN THE OPINION OF THE REVIEWER. DISTURBED SOIL AREAS RESULTING FROM THE DISPOSITION OF TEMPORARY MEASURES SHALL BE PERMANENTLY STABILIZED TO PREVENT FURTHER EROSION AND SEDIMENTATION.

7. PROPERTIES AND WATERWAYS DOWNSTREAM FROM CONSTRUCTION SITE SHALL BE PROTECTED FROM SEDIMENT DISPOSITION AND EROSION.

8. EROSION CONTROL DESIGN AND CONSTRUCTION SHALL FOLLOW THE REQUIREMENTS IN INDEC NOS. 101, 102 AND 103 OF FDOT ROWDWAY AND TRAFFIC DESIGN STANDARDS.

9. THE ENGINEER MAY APPROVE MODIFICATIONS OR ALTER PLANS TO THESE EROSION CONTROL CRITERIA DUE TO SITE SPECIFIC CONDITIONS.

10. FILTER FABRIC SHALL BE INSTALLED ON ALL DRAINAGE INLET TOPS AND SOD SHALL BE PLACED AROUND DITCH BOTTOM INLETS TO PREVENT DEBRIS AND SILTATION FROM ENTERING DRAINAGE SYSTEM DURING CONSTRUCTION.

11. SILT FENCES OR STRAW BALES SHALL BE UTILIZED AT INLETS AND ALONG PROPERTY LINES TO RETAIN SEDIMENT ON THE SITE. A TRENCH SHALL BE EXCAVATED THE WIDTH OF A BALE AND FOUR INCHES DEEP. EACH BALE SHALL BE ANCHORED BY AT LEAST TWO STAKES.

12. WATER TRUCKS SHALL BE UTILIZED TO MINIMIZE WIND EROSION.

13. A CONSTRUCTION ENTRANCE SHALL BE CONSTRUCTED AND CONTAIN AN AGGREGATE LAYER (FDOT AGGREGATE NO. 1) AT LEAST SIX INCHES THICK. IT MUST EXTEND TO THE FULL WIDTH OF THE VEHICULAR INGRESS AND EGRESS AREA. THE LENGTH OF THE ENTRANCE MUST BE AT LEAST 50 FEET.

14. IF THE CONDITIONS ON THE SITE ARE SUCH THAT MUD IS NOT REMOVED BY THE VEHICLES TRAVELING OVER THE GRAVEL ENTRANCE ROAD, THEN THE TIRES OF THE VEHICLES MUST BE WASHED BEFORE ENTERING A PUBLIC ROAD. WASH WATER MUST BE CARRIED AWAY FROM THE ENTRANCE TO A SETTLING AREA TO REMOVE SEDIMENT.

15. THE LIMEROCK SHALL BE INSTALLED IMMEDIATELY AFTER THE FINISHED GRADING IS COMPLETE ON THE ROAD AND PARKING LOT SUBGRADE.

16. LAKE BANKS SHALL BE SEED AND MULCHED OR SODDED IMMEDIATELY AFTER FINAL GRADING.

17. TRUCKS ENTERING AND EXITING THE SITE WITH FILL MATERIAL SHALL BE COVERED.

18. DISCHARGE FROM DEWATERING OPERATIONS SHALL BE RETAINED ONSITE IN A CONTAINMENT AREA.

19. EXPOSED SOIL SHALL BE PLANTED WITH VEGETATIVE MATERIAL OR COVERED WITH PROTECTIVE GROUND COVER AS SOON AS PRACTICAL UPON COMPLETION OF CONSTRUCTION ACTIVITIES.

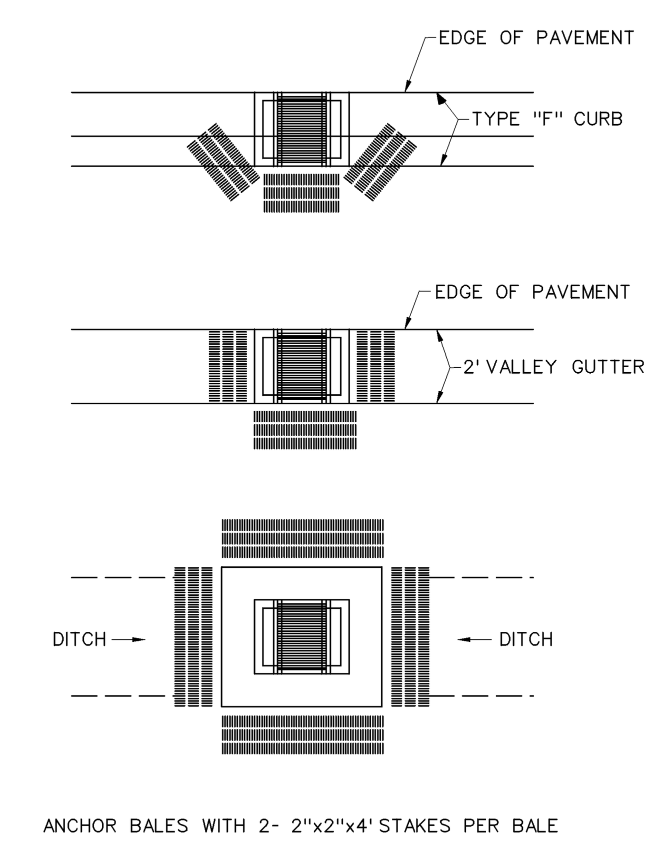

ANCHOR BALES WITH 2- 2"x2"x4' STAKES PER BALE

PER FDOT INDEX No.102

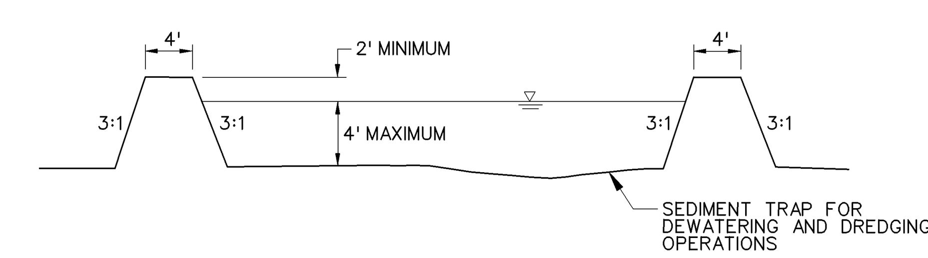

NOTE:
LOCATION OF TEMPORARY SEDIMENT TRAPS TO BE DETERMINED BY CONTRACTOR

SEDIMENT TRAP DETAIL

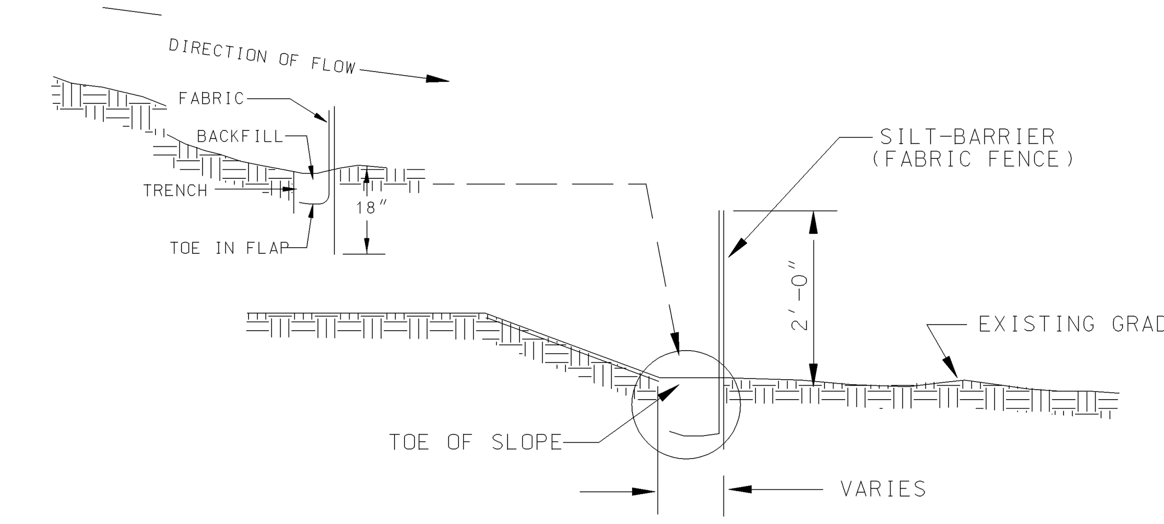

FABRIC FENCE SILT-BARRIER

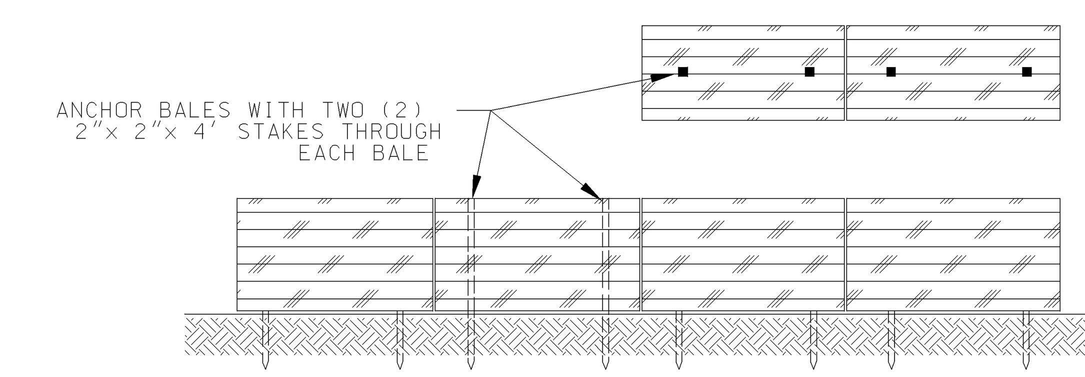

BALED HAY SILT-BARRIER

PERIMETER EROSION AND SEDIMENT CONTROL

NOTES:
1. CONTRACTOR IS REQUIRED TO PREVENT ANY SEDIMENT TRANSPORT FROM THE PROJECT SITE ON TO ADJACENT PROPERTY. INSTALLATION OF EITHER BALED HAY OR FABRIC FENCE TYPE SILT BARRIER IS ACCEPTABLE. THE BARRIER MUST REMAIN IN PLACE UNTIL UPLAND VEGETATION IS ESTABLISHED.
2. BEFORE REMOVING SILT BARRIER, CONTRACTOR SHALL COLLECT AND DISPOSE OF ANY ACCUMULATED SILT.

SILT BARRIER DETAIL

GENERAL NOTES

1. Floating turbidity barriers are to be paid for under the contract unit price for Floating Turbidity Barrier, LF.
2. Staked turbidity barriers are to be paid for under the contract unit price for Staked Turbidity Barrier, LF.

LEGEND

- Pile Locations
- Dredge Or Fill Area
- Mooring Buoy w/Anchor
- Anchor
- Barrier Movement Due To Current Action

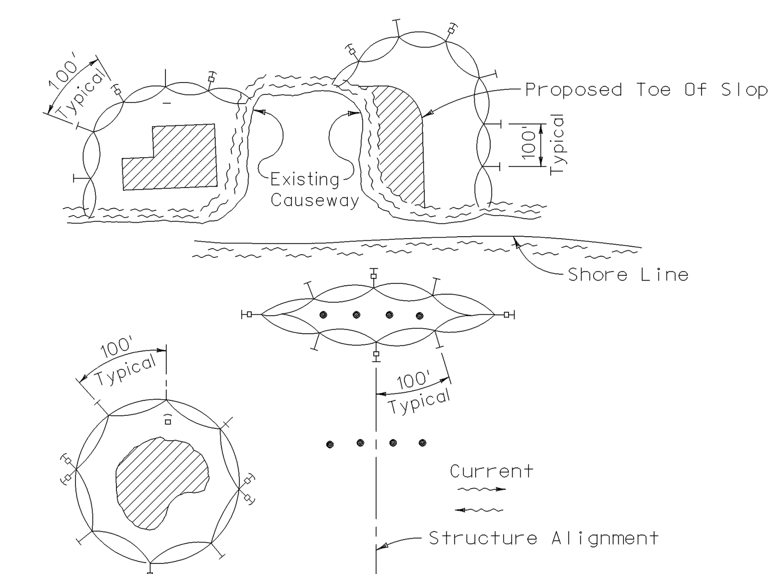

NOTES:

1. Turbidity barriers are to be used in all permanent bodies of water regardless of water depth.
2. Number and spacing of anchors dependent on current velocities.
3. Deployment of barrier around pile locations may vary to accommodate construction operations.
4. Navigation may require segmenting barrier during construction operations.
5. For additional information see Section 104 of the Standard Specifications.

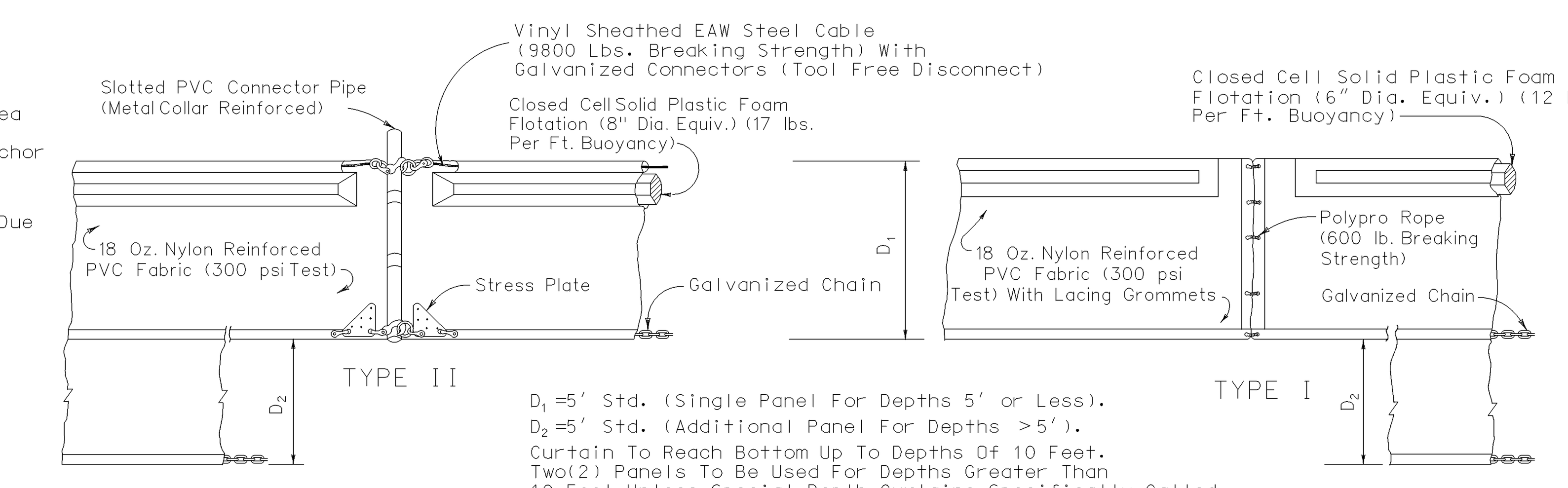

D_1 =5' Std. (Single Panel For Depths 5' or Less).
D_2 =5' Std. (Additional Panel For Depths >5').
Curtain To Reach Bottom Up To Depths Of 10 Feet.
Two(2) Panels To Be Used For Depths Greater Than 10 Feet Unless Special Depth Curtains Specifically Called For In The Plans Or As Determined By The Engineer.

NOTICE: COMPONENTS OF TYPES I AND II MAY BE SIMILAR OR IDENTICAL TO PROPRIETARY DESIGNS. ANY INFRINGEMENT ON THE PROPRIETARY RIGHTS OF THE DESIGNER SHALL BE THE SOLE RESPONSIBILITY OF THE USER. SUBSTITUTIONS FOR TYPES I AND II SHALL BE AS APPROVED BY THE ENGINEER.

FLOATING TURBIDITY BARRIERS

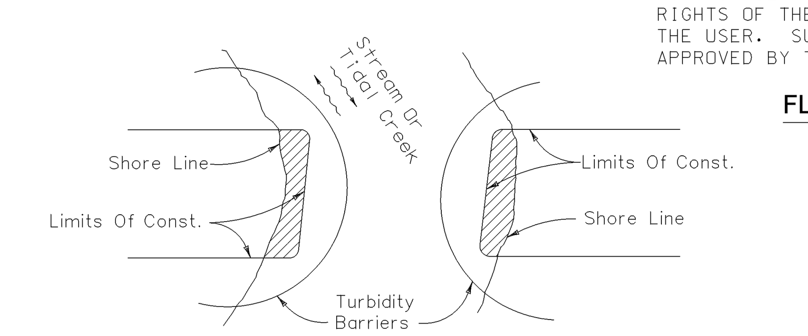

Note:
Turbidity barriers for flowing streams and tidal creeks may be either floating, or staked types or any combinations of types that will suit site conditions and meet erosion control and water quality requirements. The barrier type(s) will be at the Contractors option unless otherwise specified in the plans. however payment will be under the pay item(s) established in the plans for Floating Turbidity Barrier and/or Staked Turbidity Barrier. Posts in staked turbidity barriers to be installed in vertical position unless otherwise directed by the Engineer.

TURBIDITY BARRIER APPLICATIONS

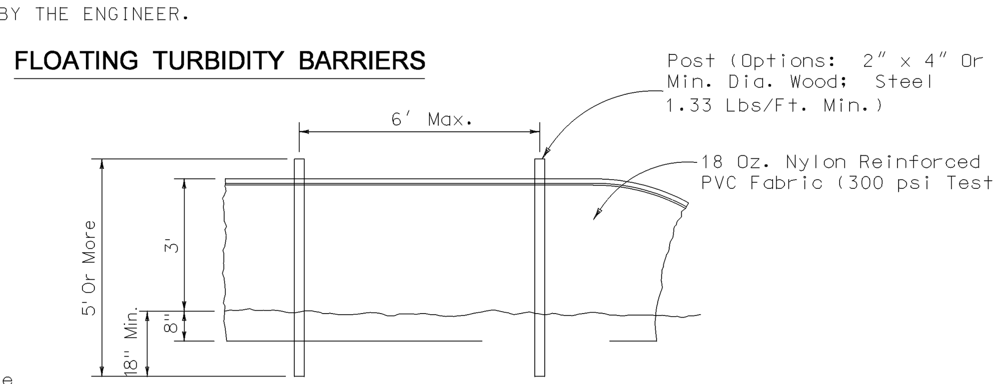

STAKED TURBIDITY BARRIER

TURBIDITY BARRIER DETAILS PER FDOT INDEX NO. 103

SCHNARS ENGINEERING CORPORATION
947 Clint Moore Road
Boca Raton, Florida 33487
Certificate of Authorization #6640
Tel: (561) 241-6455
Fax: (561) 241-5182

OWNER:	PROJECT:	TASK:	
PULTE HOMES CORPORATION	GULFSTREAM POLO PROPERTIES PUD	STORMWATER POLLUTION PREVENTION	
1400 INDIAN CREEK PARKWAY		DETAILS	
JUPITER, FLORIDA 33458	PALM BEACH COUNTY FLORIDA		

ORIGINAL: JANUARY 2016
REVISIONS:
1
2
3
4
5
6
7
8
9
10
11
12

SEAL

Jeffrey T. Schnars, P.E.
Civil Engineer
Florida Registration No. 46697
(FOR THE FIRM)

JOB NO.	14132
DRAWN	RAD
DESIGNED	JTS
CHECKED	JWM
Q.C.	JTS
SHEET	3 OF 7

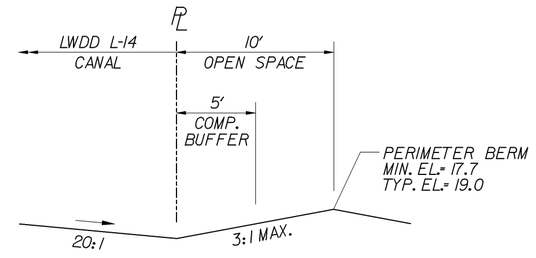

SECTION "A"
SOUTH BASIN
N.T.S.

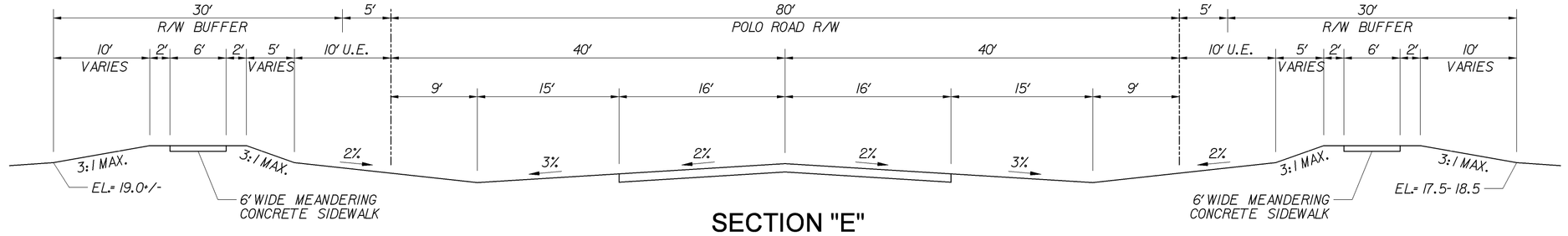

SECTION "E"
SOUTH BASIN
N.T.S.

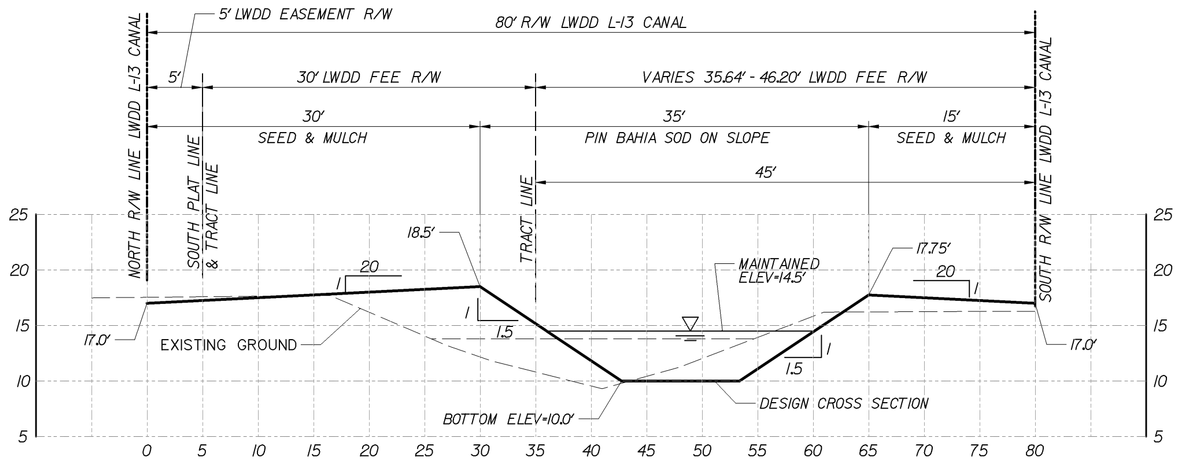

NOTES:
1. ELEVATIONS BASED ON THE NORTH AMERICAN VERTICAL DATUM OF 1988 (NAVD 1988).
2. THIS CANAL DESIGN SECTION IS FOR INSPECTION PURPOSES ONLY. IT MAY NOT DEPICT ALL OF LAKE WORTH DRAINAGE DISTRICT'S RIGHT-OF-WAY INTERESTS.
3. THE PERMITTEE WILL COORDINATE WITH THE LAKE WORTH DRAINAGE DISTRICT'S ENGINEERING DEPARTMENT PRIOR TO WORKING WITHIN THE LAKE WORTH DRAINAGE DISTRICT'S RIGHT-OF-WAY.
4. FILL MATERIAL FROM THE CANAL MAY NOT BE RELIED ON FOR SITE WORK.

L.W.D.D. L-13 CANAL
CROSS SECTION LYONS ROAD TO E-2W
LOOKING EAST
SCALE: 1" = 10' (VERT. & HORIZ)

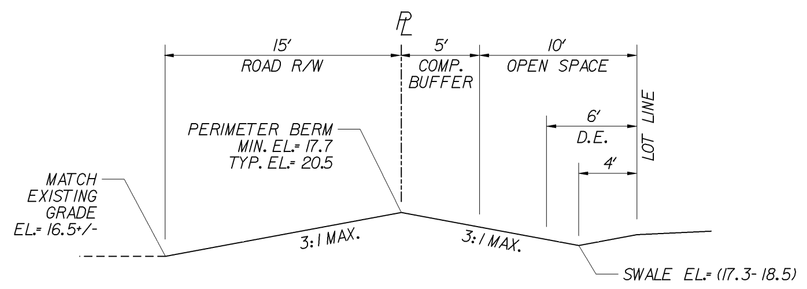

SECTION "B"
SOUTH BASIN
N.T.S.

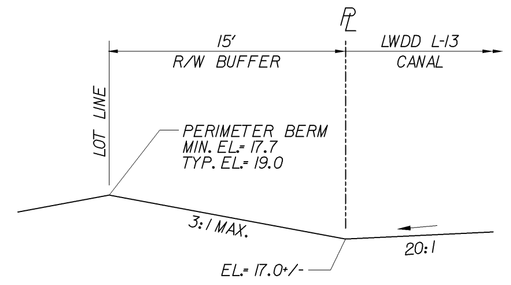

SECTION "F"
SOUTH BASIN
N.T.S.

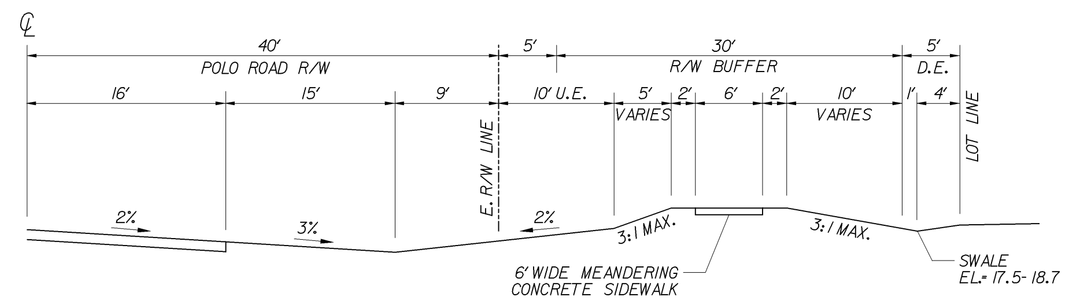

SECTION "J"
NORTH BASIN
N.T.S.

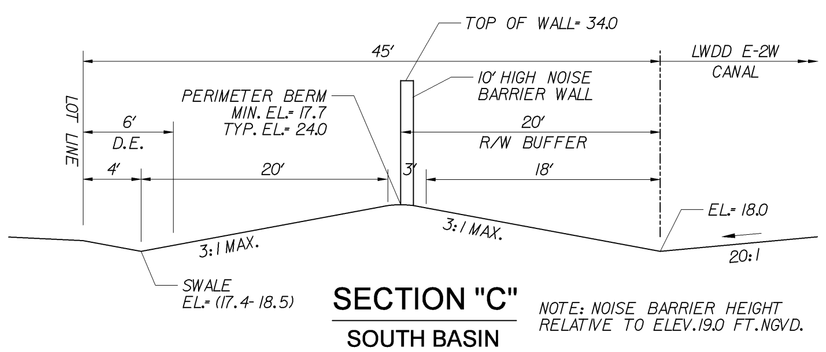

SECTION "C"
SOUTH BASIN
N.T.S.

NOTE: NOISE BARRIER HEIGHT RELATIVE TO ELEV.19.0 FT.NGVD.

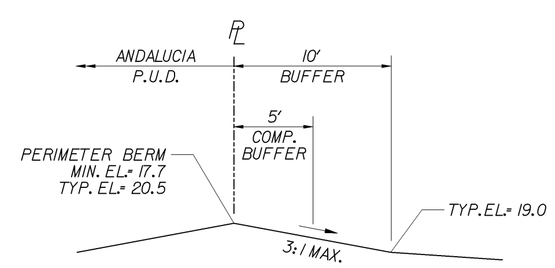

SECTION "G"
SOUTH BASIN
N.T.S.

NOTE: COORDINATE WITH ANDALUCIA P.U.D. CONTRACTOR TO CONSTRUCT COMMON BERM.

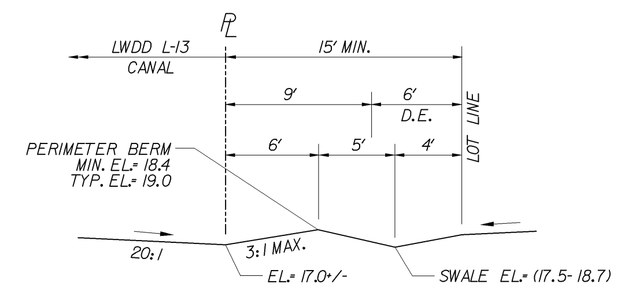

SECTION "K"
NORTH BASIN
N.T.S.

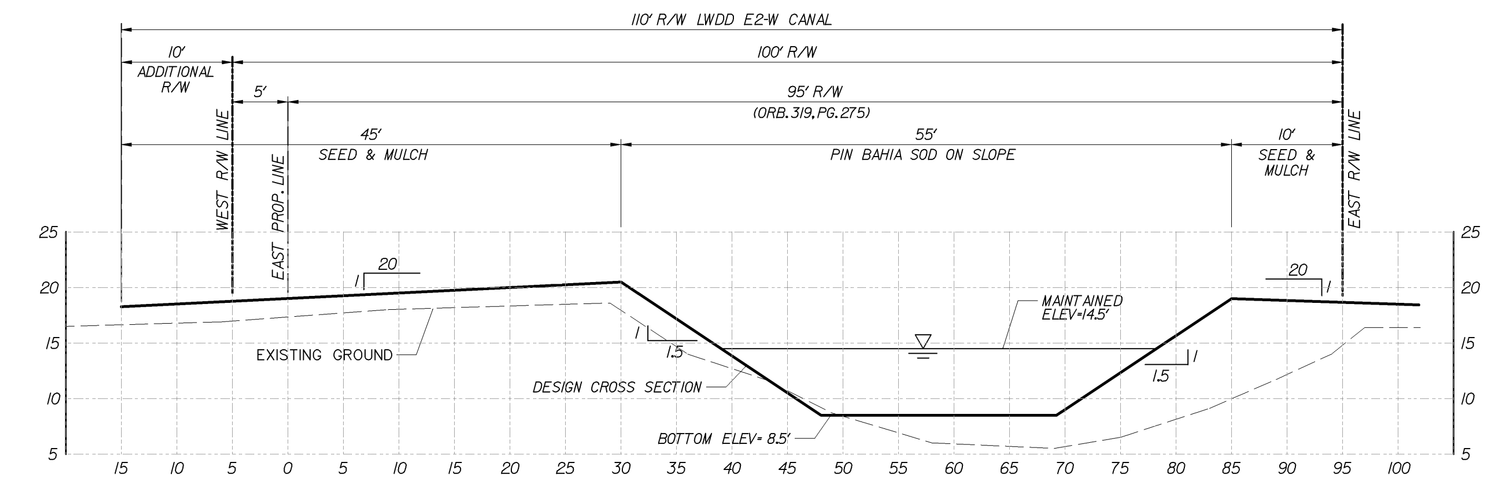

NOTES:
1. ELEVATIONS BASED ON THE NORTH AMERICAN VERTICAL DATUM OF 1988 (NAVD 1988).
2. THIS CANAL DESIGN SECTION IS FOR INSPECTION PURPOSES ONLY. IT MAY NOT DEPICT ALL OF LAKE WORTH DRAINAGE DISTRICT'S RIGHT-OF-WAY INTERESTS.
3. THE PERMITTEE WILL COORDINATE WITH THE LAKE WORTH DRAINAGE DISTRICT'S ENGINEERING DEPARTMENT PRIOR TO WORKING WITHIN THE LAKE WORTH DRAINAGE DISTRICT'S RIGHT-OF-WAY.
4. FILL MATERIAL FROM THE CANAL MAY NOT BE RELIED ON FOR SITE WORK.

L.W.D.D. E2-W CANAL
CROSS SECTION LAKE WORTH ROAD TO L-14
LOOKING NORTH
SCALE: 1" = 10' (VERT. & HORIZ)

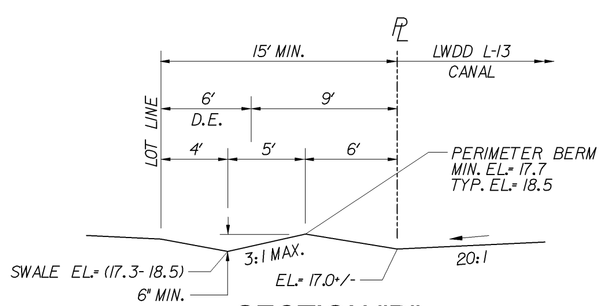

SECTION "D"
SOUTH BASIN
N.T.S.

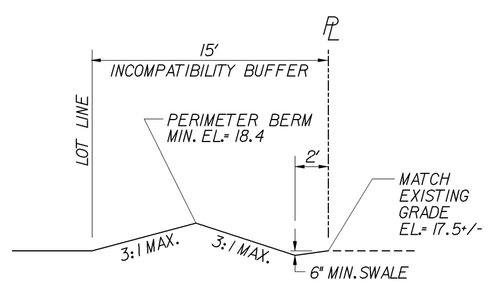

SECTION "H"
NORTH BASIN
N.T.S.

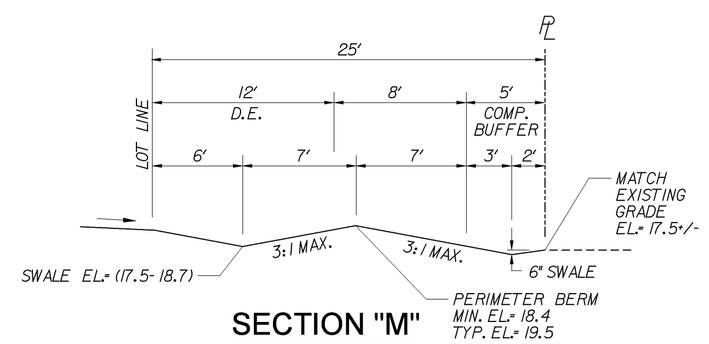

SECTION "M"
NORTH BASIN
N.T.S.

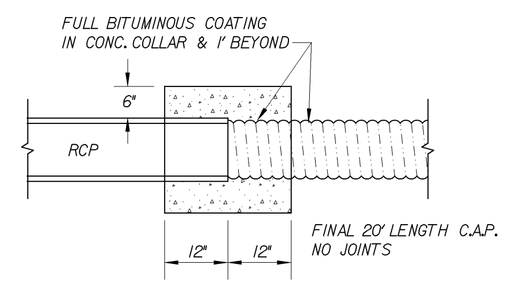

CONCRETE COLLAR DETAIL
N.T.S.

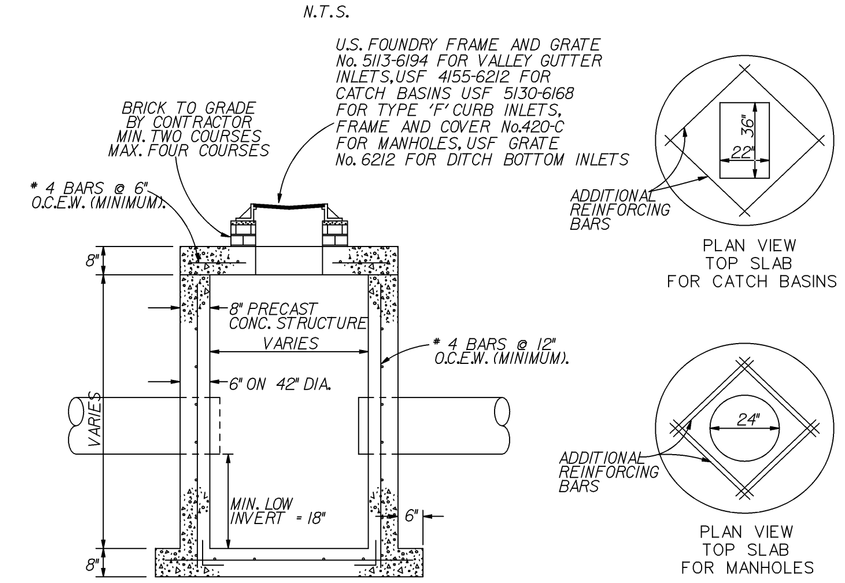

TYPICAL CATCH BASIN
NOTE: ONLY ROUND STRUCTURES SHALL BE USED FOR CURB INLETS
N.T.S.

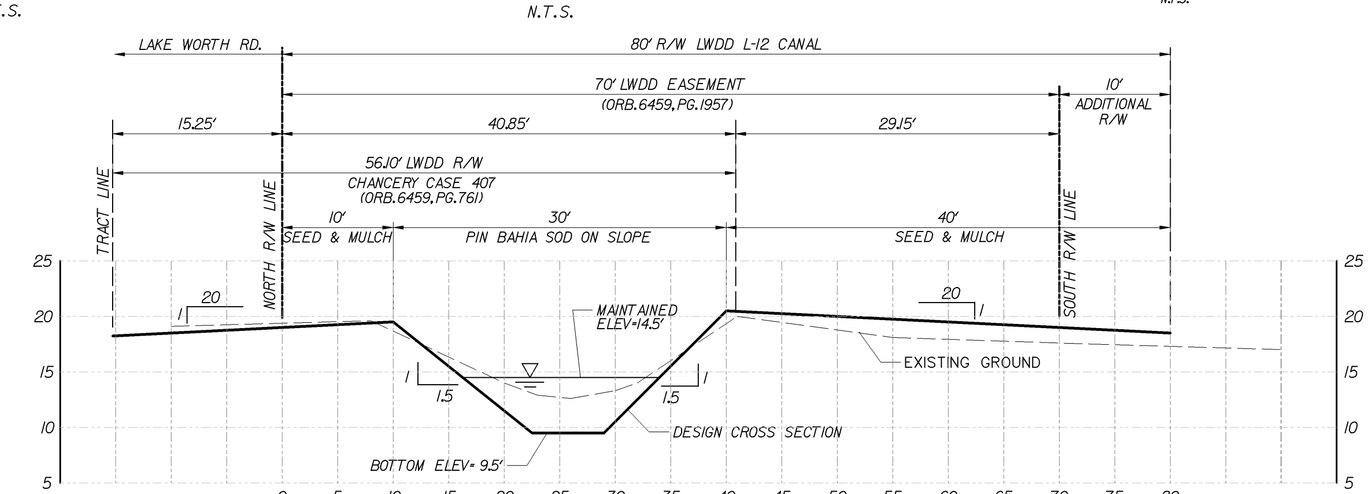

NOTES:
1. ELEVATIONS BASED ON THE NORTH AMERICAN VERTICAL DATUM OF 1988 (NAVD 1988).
2. THIS CANAL DESIGN SECTION IS FOR INSPECTION PURPOSES ONLY. IT MAY NOT DEPICT ALL OF LAKE WORTH DRAINAGE DISTRICT'S RIGHT-OF-WAY INTERESTS.
3. THE PERMITTEE WILL COORDINATE WITH THE LAKE WORTH DRAINAGE DISTRICT'S ENGINEERING DEPARTMENT PRIOR TO WORKING WITHIN THE LAKE WORTH DRAINAGE DISTRICT'S RIGHT-OF-WAY.
4. FILL MATERIAL FROM THE CANAL MAY NOT BE RELIED ON FOR SITE WORK.

L.W.D.D. L-12 CANAL
CROSS SECTION E-1 TO E-2W
LOOKING EAST
SCALE: 1" = 10' (VERT. & HORIZ)

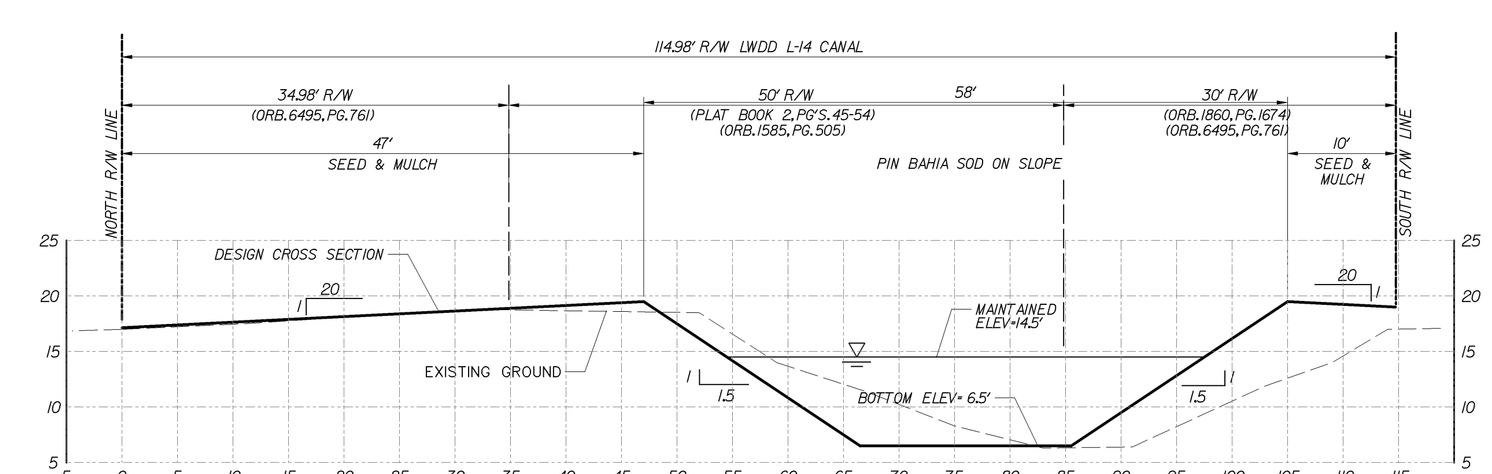

NOTES:
1. ELEVATIONS BASED ON THE NORTH AMERICAN VERTICAL DATUM OF 1988 (NAVD 1988).
2. THIS CANAL DESIGN SECTION IS FOR INSPECTION PURPOSES ONLY. IT MAY NOT DEPICT ALL OF LAKE WORTH DRAINAGE DISTRICT'S RIGHT-OF-WAY INTERESTS.
3. THE PERMITTEE WILL COORDINATE WITH THE LAKE WORTH DRAINAGE DISTRICT'S ENGINEERING DEPARTMENT PRIOR TO WORKING WITHIN THE LAKE WORTH DRAINAGE DISTRICT'S RIGHT-OF-WAY.
4. FILL MATERIAL FROM THE CANAL MAY NOT BE RELIED ON FOR SITE WORK.

L.W.D.D. L-14 CANAL
CROSS SECTION LYONS ROAD TO E-2W
LOOKING EAST
SCALE: 1" = 10' (VERT. & HORIZ)

SCHNARS
ENGINEERING CORPORATION
947 Clint Moore Road
Boca Raton, Florida 33487
Certificate of Authorization #6640
Tel: (561) 241-6455
Fax: (561) 241-5182

OWNER: PULTE HOMES CORPORATION
1400 INDIAN CREEK PARKWAY
JUPITER, FLORIDA 33458

PROJECT: GULFSTREAM POLO PROPERTIES PUD
PALM BEACH COUNTY FLORIDA

TASK: CONSTRUCTION DETAILS

ORIGINAL: JANUARY 2016
REVISIONS:
1 3/10/16 ADD LWDD SECTIONS
2
3
4
5
6
7
8
9
10
11
12

SEAL

Jeffrey T. Schnars, P.E.
Civil Engineer
Florida Registration No. 46697
(FOR THE FIRM)

JOB NO. 14132
DRAWN RAD
DESIGNED JTS
CHECKED JWM
Q.C. JTS
SHEET 4 OF 7

G:\Projects\2014\14132\Engineering\14132_LWDD_Backup.dwg
3/10/2016 2:05:05 PM

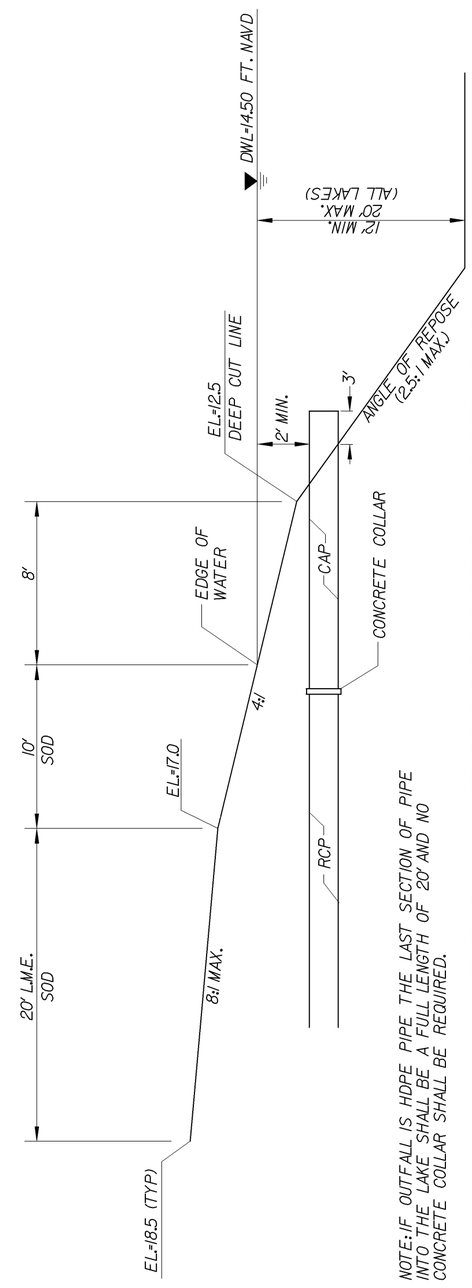

NOTE: IF OUTFALL IS HDPE PIPE THE LAST SECTION OF PIPE INTO THE LAKE SHALL BE A FULL LENGTH OF 20' AND NO CONCRETE COLLAR SHALL BE REQUIRED.

TYPICAL LAKE CROSS-SECTION (NORTH BASIN)

N.T.S.

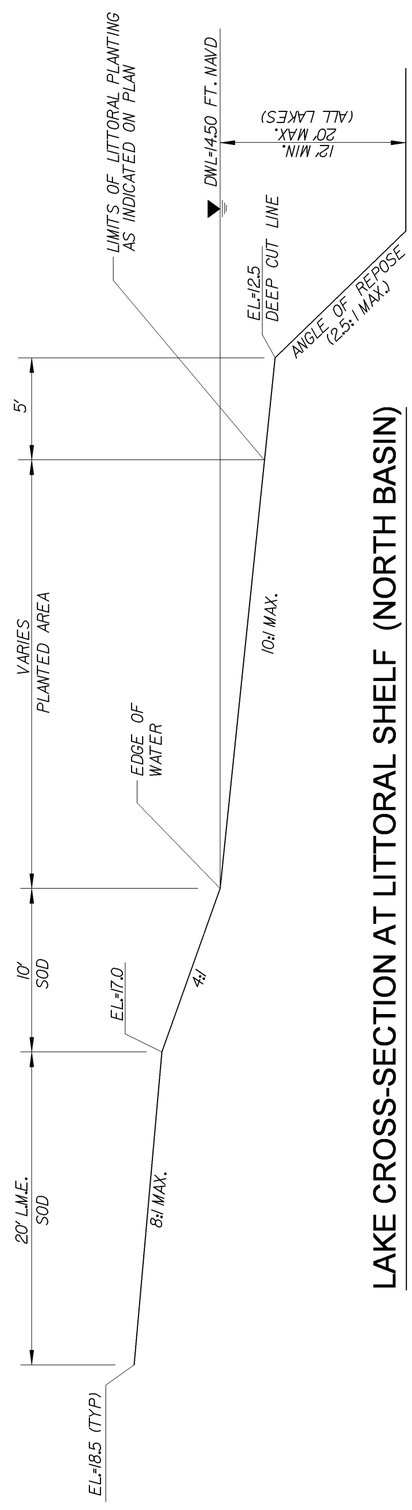

LAKE CROSS-SECTION AT LITTORAL SHELF (NORTH BASIN)

N.T.S.

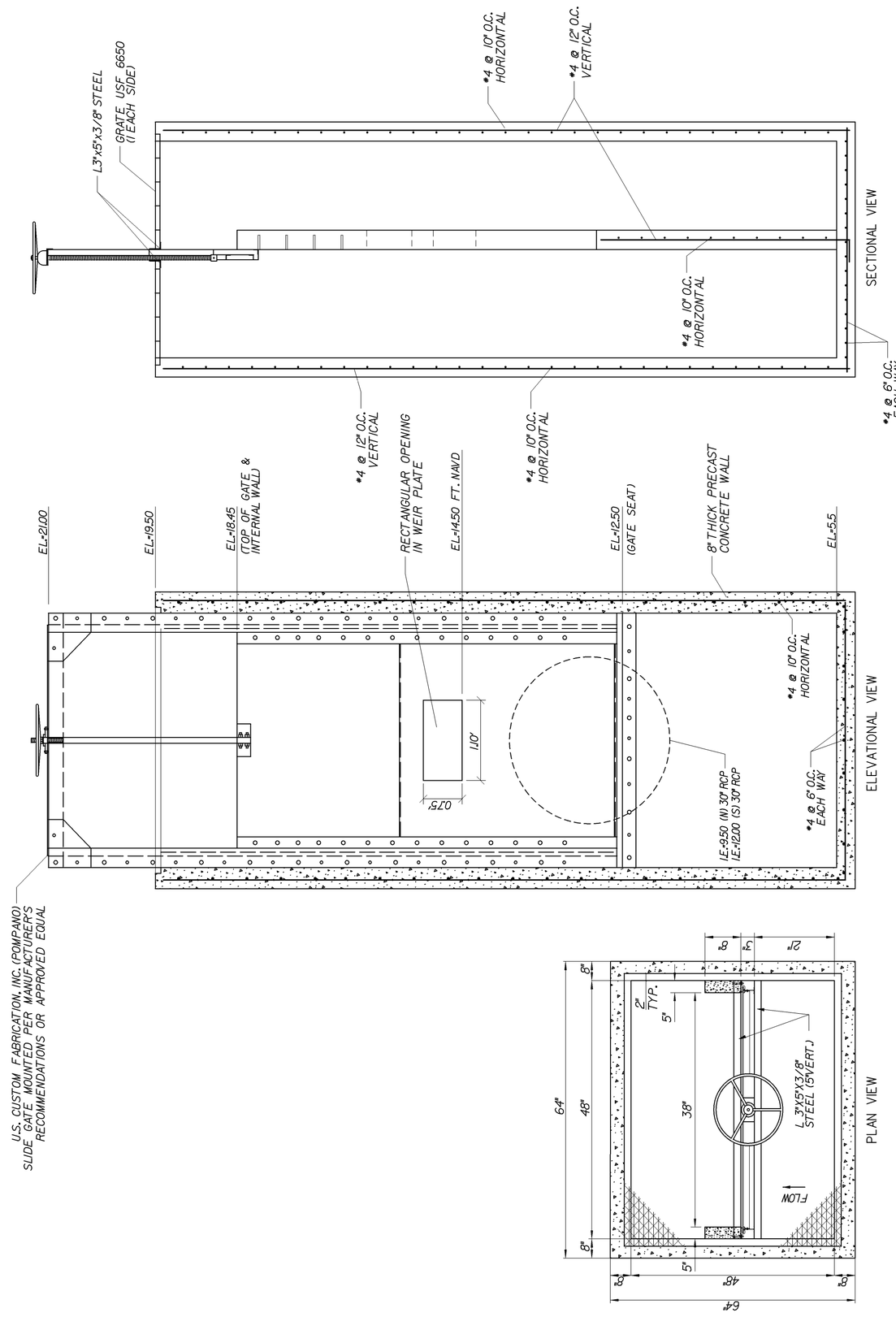

PROPOSED CONTROL STRUCTURE #1 (NORTH BASIN)

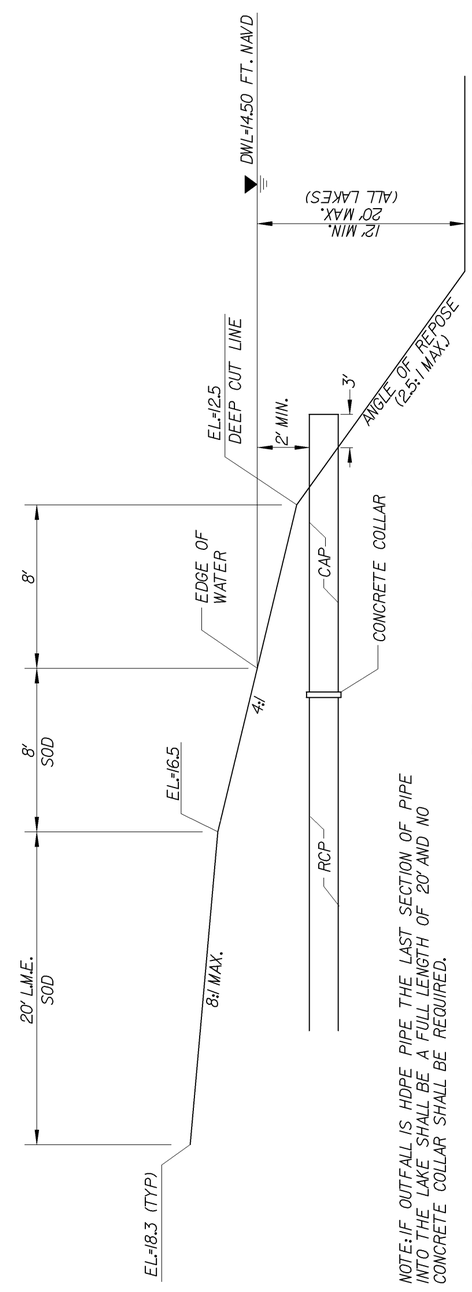

NOTE: IF OUTFALL IS HDPE PIPE THE LAST SECTION OF PIPE INTO THE LAKE SHALL BE A FULL LENGTH OF 20' AND NO CONCRETE COLLAR SHALL BE REQUIRED.

TYPICAL LAKE CROSS-SECTION (SOUTH BASIN)

N.T.S.

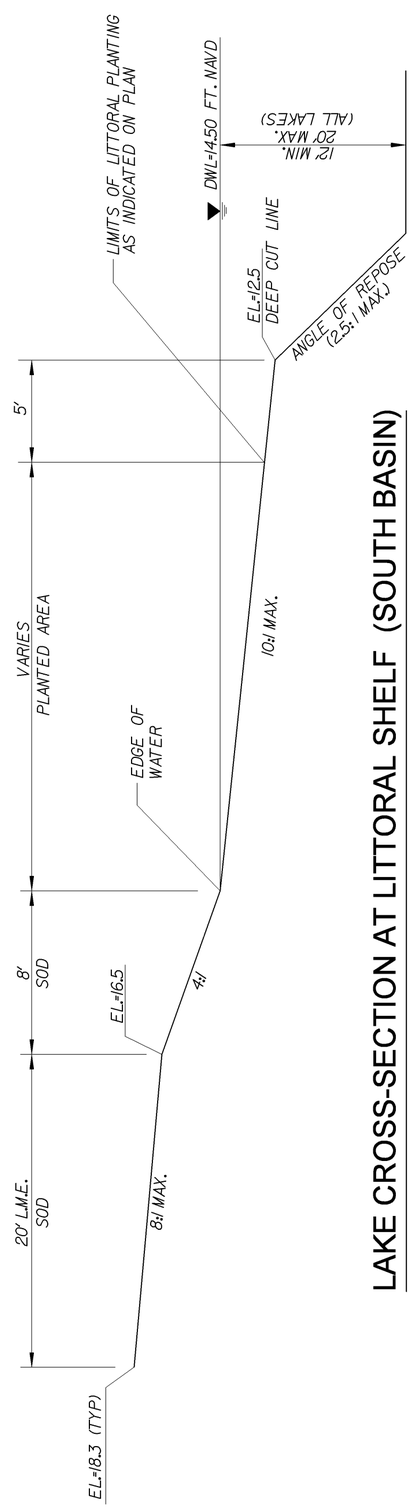

LAKE CROSS-SECTION AT LITTORAL SHELF (SOUTH BASIN)

N.T.S.

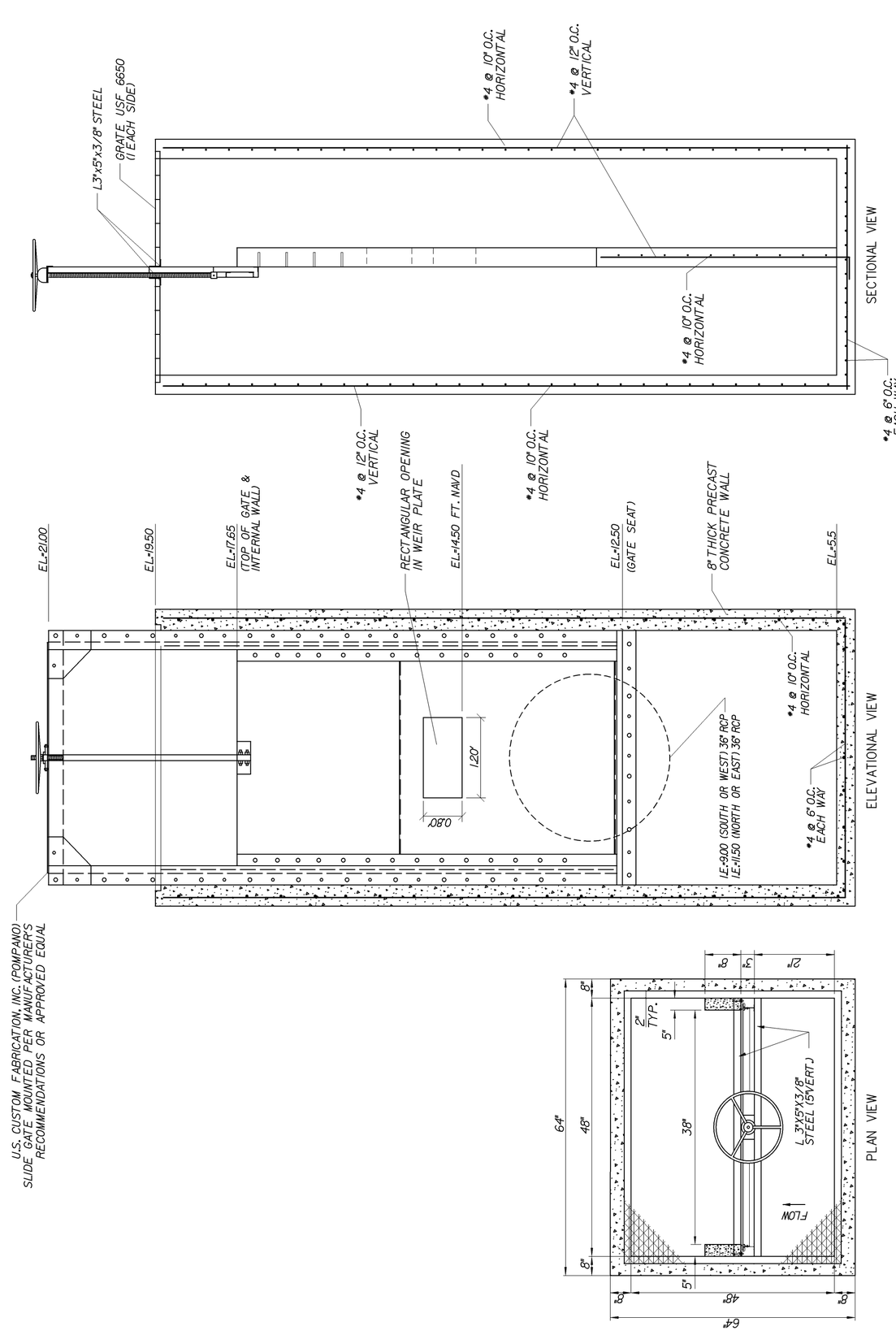

PROPOSED CONTROL STRUCTURE #2 & #3 (SOUTH BASIN)

JOB NO. 14132
DRAWN RAD
DESIGNED JTS
CHECKED JWM
Q.C. JTS
SHEET 5 OF 7

Jeffrey T. Schnars, P.E.
Civil Engineer
Registration No. 46697
Florida Registration No. 6640 (FOR THE FIRM)

SEAL

ORIGINAL: JANUARY 2016
REVISIONS:
1
2
3
4
5
6
7
8
9
10
11
12

TASK:

CONSTRUCTION DETAILS

PROJECT: **GULFSTREAM POLO PROPERTIES PUD**

OWNER: **PULTE HOMES CORPORATION**
1400 INDIAN CREEK PARKWAY
JUPITER, FLORIDA 33458

PALM BEACH COUNTY **FLORIDA**

SCHNARS
ENGINEERING CORPORATION
947 Clint Moore Road
Boca Raton, Florida 33487
Certificate of Authorization #6640
Tel: (561) 241-6455
Fax: (561) 241-5182

2/5/2016 10:35:47 AM $FILE$

PAVING, GRADING AND DRAINAGE NOTES

1. ALL UNSUITABLE MATERIALS, SUCH AS MUCK, HARDPAN, ORGANIC MATERIAL AND OTHER DELETERIOUS MATERIAL AS CLASSIFIED BY AASHTO M-145, FOUND WITHIN THE BUILDING PAD, ROAD AND PARKING LOT AREAS SHALL BE REMOVED DOWN TO ROCK OR SUITABLE MATERIAL, AND REPLACED WITH THE SPECIFIED FILL MATERIAL IN MAXIMUM 18" LIFTS THOROUGHLY AND UNIFORMLY COMPACTED TO ACHIEVE 95 PERCENT OF THE ASTM D1557 MAXIMUM DRY DENSITY.

2. ALL AREAS SHALL BE CLEARED AND GRUBBED PRIOR TO CONSTRUCTION. THIS SHALL CONSIST OF THE COMPLETE REMOVAL AND DISPOSAL OF ALL TREES, BRUSH, STUMPS, ROOTS, GRASS, WEEDS, RUBBISH AND ALL OTHER OBSTRUCTION RESTING ON OR PROTRUDING THROUGH THE SURFACE OF THE EXISTING GROUND TO A DEPTH OF 1 FOOT. ITEMS DESIGNATED TO REMAIN OR TO BE RELOCATED OR TO BE ADJUSTED SHALL BE SO DESIGNATED ON THE DRAWINGS.

3. FILL MATERIAL SHALL BE CLASSIFIED AS A-1, A-3, or A-2-4 IN ACCORDANCE WITH AASHTO M-145 AND SHALL BE FREE FROM VEGETATION AND ORGANIC MATERIAL. FILL MATERIAL SHOULD HAVE NOT MORE THAN 8% BY WEIGHT PASSING THE NO. 200 SIEVE AND SHALL HAVE NO PARTICLE SIZE LARGER THAN 3". CARE SHOULD BE EXERCISED WHEN PLACING MATERIALS WHICH EXCEED 3" TO ASSURE THAT NESTING DOES NOT OCCUR AND TO FURTHER ASSURE THAT THE +3" PARTICLES ARE FULLY SURROUNDED BY FINER GRAINED MATERIAL.

4. THE CONTRACTOR SHALL BE RESPONSIBLE FOR PROVIDING CERTIFIED MATERIAL TEST RESULTS TO THE ENGINEER OF RECORD PRIOR TO THE RELEASE OF FINAL CERTIFICATION BY THE ENGINEER. TEST RESULTS MUST INCLUDE, BUT MAY NOT BE LIMITED TO, DENSITIES FOR SUBGRADE AND LIMEROCK, UTILITIES, EXCAVATION, ASPHALT GRADATION REPORTS, CONCRETE CYLINDERS, ETC.

5. ALL INLETS AND PIPE SHALL BE PROTECTED DURING CONSTRUCTION TO PREVENT SILTATION IN THE DRAINAGE SYSTEMS BY WAY OF TEMPORARY PLUGS, PLYWOOD COVERS OR FILTER FABRIC OVER THE INLETS AND HAY BALES AROUND INLETS.THE ENTIRE DRAINAGE SYSTEM SHALL BE CLEANED OF ALL DEBRIS PRIOR TO FINAL ACCEPTANCE.

6. WHERE NEW ASPHALT MEETS EXISTING ASPHALT, THE EXISTING ASPHALT SHALL BE SAWCUT TO PROVIDE A STRAIGHT EVEN LINE. PRIOR TO REMOVING CURB OR GUTTER, THE ADJACENT ASPHALT SHALL BE SAWCUT TO PROVIDE A STRAIGHT EVEN LINE.

7. ALL PROPOSED ELEVATIONS REFER TO FINISHED GRADES.

8. SITE GRADING ELEVATIONS SHALL BE WITHIN 0.1 FOOT OF THE REQUIRED ELEVATION AND ALL AREAS SHALL BE GRADED TO DRAIN.

9. ALL STABILIZED SUBGRADE SHALL HAVE AN FBV OF 75 OR AN LBR OF 40, UNLESS OTHERWISE NOTED. ALL SUBGRADE SHALL BE COMPACTED TO 98% MAXIMUM DRY DENSITY PER AASHTO T-180. STABILIZATION MAY BE SUBSTITUTED WITH AN ADDITIONAL 5.5" OF BASEROCK ON COMPACTED SUBGRADE.

10. ROADWAY BASE COURSE SHALL CONFORM TO THE REQUIREMENTS OF SECTION 200 OR 204 OF FLORIDA'S DEPARTMENT OF TRANSPORTATION STANDARD SPECIFICATIONS. BASE SHALL BE COMPACTED TO 98% PER AASHTO T-180. ALL BASE SHALL BE PRIMED.

11. CONCRETE AND ASPHALT SHALL BE OF THE TYPE DESIGNATED ON THE DRAWINGS.

12. PLASTIC FILTER FABRIC SHALL BE MIRAFI, TYPAR OR EQUAL CONFORMING TO SECTION 985 OF THE FDOT STANDARD SPECIFICATIONS.

13. CONCRETE SIDEWALK SHALL BE 4 INCHES THICK ON COMPACTED SUBGRADE. CRACK CONTROL JOINTS SHALL BE 5 FEET ON CENTER. THE BACK OF SIDEWALK ELEVATION SHALL EQUAL THE CROWN OF ROADWAY, UNLESS OTHERWISE SPECIFIED BY LOCAL CODES, OR SHOWN ON THE DRAWINGS. ALL CONCRETE SIDEWALKS THAT CROSS DRIVEWAYS SHALL BE 6 INCHES THICK WITH 6" X 6" WELDED WIRE MESH REINFORCEMENT.

14. PIPE SPECIFICATIONS: THE MATERIAL TYPE IS SHOWN ON THE DRAWINGS BY ONE OF THE FOLLOWING DESIGNATIONS:

RCP = REINFORCED CONCRETE PIPE, ASTM DESIGNATION C-76 TABLE III.
CMP = CORRUGATED METAL (ALUMINUM) PIPE, ASTM DESIGNATION M-196
CMP (SMOOTH LINED)=CORRUGATED METAL ALUMINUM PIPE (SMOOTH LINES), ASTM DESIGNATION M-196

SCP = SLOTTED CONCRETE PIPE, FDOT SECTIONS 941 AND 942.
PVC = POLYVINYL CHLORIDE PIPE
PCMP= PERFORATED CMP, FDOT SECTION 945
DIP = DUCTILE IRON PIPE
HDPE = SMOOTH LINED HIGH DENSITY POLYETHYLENE, AASHTO M294, TYPE-S

15. ALL CONSTRUCTION SHALL BE IN ACCORDANCE WITH THE STANDARDS OF PALM BEACH COUNTY ENGINEERING DEPARTMENT.

16. ASPHALT: BITUMINOUS MATERIAL SHALL BE ASPHALT CEMENT, VISCOSITY GRADE AC-20, CONFORMING TO THE REQUIREMENTS OF FDOT STANDARD SPECIFICATIONS, 1986, EDITION, SECTION 916-1.

PRIME COAT SHALL BE CUT BACK ASPHALT GRADE RC-70, OR RC-250 CONFORMING TO THE REQUIREMENTS SPECIFIED IN AASHTO DESIGNATION M81-75 (1982) (RATE - 0.10 GALLONS PER SQUARE YARD). TACK COAT SHALL BE EMULSIFIED ASPHALT, GRADE RS-2 CONFORMING TO THE REQUIREMENTS SPECIFIED IN AASHTO DESIGNATION M 140-82 (RATE 0.02 TO 0.08 GALLONS PER SQUARE YARD).

DESIGN MIX SHALL CONFORM TO FDOT SECTION 331 UNLESS OTHERWISE SHOWN ON THE DRAWINGS.

17. DENSITY TESTS SHALL BE TAKEN AT LOCATIONS AS DIRECTED BY THE ENGINEER.

18. ASPHALTIC CONCRETE SHALL BE OF THE TYPE SPECIFIED IN THE ROADWAY CROSS-SECTIONS.

19. ALL CONCRETE SHALL HAVE A MINIMUM COMPRESSIVE STRENGTH OF 3000 PSI AT 28 DAYS, UNLESS OTHERWISE NOTED.

20. PRECAST CONCRETE MANHOLES AND CATCH BASINS SHALL MEET THE REQUIREMENTS OF ASTM SPECIFICATIONS C-478 AND 64T, AND PALM BEACH COUNTY ENGINEERING DEPARTMENT STANDARDS.

21. CONCRETE FOR PRECAST MANHOLE AND CATCH BASINS SHALL HAVE A MINIMUM COMPRESSIVE STRENGTH OF 4,000 PSI AT 28 DAYS.

22. REINFORCING STEEL FOR MANHOLES AND CATCH BASINS SHALL CONFORM TO ASTM SPECIFICATION A-615 AND A-305, LATEST REVISION.

23. ALL RE-BAR SPLICES IN CONCRETE STRUCTURES SHALL HAVE A MINIMUM LAP OF 24 BAR DIAMETERS.

24. ALL JOINTS IN CONCRETE STRUCTURES SHALL BE FINISHED WATER TIGHT.

25. ALL SPACES AROUND PIPING ENTERING OR LEAVING MANHOLES AND CATCH BASINS SHALL BE COMPLETELY FILLED WITH 2:1 CEMENT MORTAR.

26. ALL CMP SHALL BE HELICAL ALUMINUM UNLESS OTHERWISE NOTED.

27. JOINTS IN CORRUGATED ALUMINUM PIPE SHALL EMPLOY CORRUGATED METAL BANDS OF SIMILAR METAL AND CORRUGATIONS WITH NEOPRENE, RAM-NEK, OR BITUMASTIC GASKETS INSTALLED PER THE MANUFACTURER'S RECOMMENDATIONS. HDPEP PIPE SHALL BE ADS N-12 HP WITH ADS WATER STOP GASKET AT STRUCTURES OR APPROVED EQUAL. JOINTS SHALL BE WRAPPED WITH FILTER FABRIC.

28. REINFORCED CONCRETE PIPE SHALL CONFORM TO THE REQUIREMENTS OF ASTM SPECIFICATION C-76, CLASS III, WALL THICKNESS B, LATEST REVISION, AND AS MODIFIED BY SECTION 941 OF THE FLORIDA DOT STANDARD SPECIFICATIONS, LATEST REVISION.

29. ALL UNDERGROUND WORK SHALL BE COMPLETED PRIOR TO PAVING.

30. ALL HANDICAP SPACES, RAMPS, AND ACCESS AREAS SHALL COMPLY IN STRICT ACCORDANCE WITH THE "2012 FLORIDA ACCESSIBILITY CODE FOR BUILDING CONSTRUCTION" AND THE "2010 ADA STANDARDS FOR ACCESSIBLE DESIGN". ANY DESCREPANCY IN THE CODE OR ON THE PLAN SHALL BE CALLED TO THE ENGINEERS ATTENTION PRIOR TO CONSTRUCTION. WHERE SIDEWALKS CONNECT TO ROADWAYS, THE SIDEWALK SHALL HAVE A DETECTABLE WARNING IN ACCORDANCE WITH FDOT INDEX 304.

31. WHERE CONNECTIONS TO AN EXISTING DRAINAGE SYSTEM ARE PROPOSED, SAID EXISTING DRAINAGE STRUCTURES AND LINES SHALL BE CLEANED OF ALL SILT AND OTHER DEBRIS PRIOR TO SAID CONNECTIONS BEING MADE. WHERE THE EXISTING DRAINAGE SYSTEM INCLUDES DITCHES, SAID DITCHES SHALL BE CLEARED AND REWORKED, AS NECESSARY, TO RESTORE THEM TO AN APPROVED DESIGN SECTION. SYSTEMS ARE TO BE CLEANED AND/OR GRADED TO THE POINT OF LEGAL POSITIVE OUTFALL.

32. ALL DRAINAGE SYSTEMS SHALL BE PUMPED DOWN TO BELOW ONE-THIRD OF THE DIAMETER OF THE PIPE (FROM THE INVERT) AND LAMPED AS A REQUIREMENT OF THE FINAL DRAINAGE INSPECTION.

33. THE CONTRACTOR SHALL FOLLOW THE EARTHWORK RECOMMENDATIONS CONTAINED IN THE GEOTECHNICAL REPORT.

PAVEMENT MARKING AND SIGNING NOTES

1. PAVEMENT MARKINGS AND GEOMETRICS SHALL BE IN ACCORDANCE WITH THE MANUAL ON UNIFORM TRAFFIC CONTROL DEVICES FOR STREETS AND HIGHWAYS AND PALM BEACH COUNTY TYPICAL No. T-P-13.

2. ALL PARKING SPACE PAVEMENT MARKINGS SHALL BE PAINT. ALL OTHER PAVEMENT MARKINGS IN ASPHALT AREAS SHALL BE THERMOPLASTIC. ALL PAVEMENT MARKINGS IN PAVER AREAS SHALL BE REFLECTORIZED COLOR APPROPRIATE PAVERS PER P.B.C. TYPICAL NO. T-P-13 OR REFLECTORIZED EPOXY PAINT.

3. THESE INSTALLATIONS SHALL BE IN ACCORDANCE WITH THE FLORIDA DEPARTMENT OF TRANSPORTATION STANDARD SPECIFICATIONS FOR ROAD AND BRIDGE CONSTRUCTION LATEST EDITION. HOWEVER, WHERE CONFLICTS EXIST, THIS TYPICALLY SHALL TAKE PRECEDENT OVER FDOT STANDARD SPECIFICATIONS.

4. ALL REFLECTIVE PAVEMENT MARKERS SHALL BE APPROVED BY PALM BEACH COUNTY TRAFFIC ENGINEERING BEFORE INSTALLATION.

5. ONE BLUE REFLECTOR SHALL BE PLACED AT ALL FIRE HYDRANT LOCATIONS IN THE CENTER OF THE ADJACENT TRAVEL LANE.

6. ALL R1-1, R2-1 AND D3's SHALL BE HIGH INTENSITY MATERIAL & SHALL BE IN ACCORADANCE WITH PALM BAECH COUNTY TYPICAL T-P-13.

7. TEMPORARY PAVEMENT MARKINGS ON FIRST LIFT OF ASPHALT SHALL BE PAINT.

GENERAL NOTES

1. UNDER FLORIDA STATUTES, THE CONTRACTOR MUST PROVIDE A 48 HOUR NOTIFICATION PRIOR TO ANY OPERATION WHICH WOULD "PIERCE THE EARTH'S SURFACE" WITH THE WORK STARTED WITHIN FIVE WORKING DAYS AFTER ALL UNDERGROUND UTILITIES HAVE BEEN IDENTIFIED. THE NOTIFICATION NUMBER IS A ONE CALL SYSTEM STATEWIDE AT (800) 432-4770 . FAILURE TO COMPLY COULD RESULT IN FINES AND DAMAGES.

UNIVERSAL COLOR CODE FOR MARKING UNDERGROUND UTILITY LINES

RED	ELECTRIC
YELLOW	GAS-OIL
ORANGE	COMMUNICATION, CATV
BLUE	WATER
GREEN	SEWER
PINK	SURVEY MARKINGS
WHITE	PROPOSED EXCAVATION

2. THE LOCATION AND SIZE OF ALL EXISTING UTILITIES AND TOPOGRAPHY HAS BEEN PREPARED FROM THE MOST RELIABLE INFORMATION AVAILABLE TO THE ENGINEER. THIS INFORMATION IS NOT GUARANTEED AND IT IS THE CONTRACTOR'S RESPONSIBILITY TO DETERMINE THE EXACT LOCATION OF ANY EXISTING UTILITIES AND TOPOGRAPHY PRIOR TO CONSTRUCTION. THE CONTRACTOR SHALL VERIFY ALL UTILITIES, BY ELECTRONIC METHODS AND BY HAND EXCAVATION IN COORDINATION WITH ALL UTILITY COMPANIES, PRIOR TO BEGINNING ANY CONSTRUCTION OPERATIONS. ANY AND ALL CONFLICTS OF EXISTING UTILITIES WITH PROPOSED IMPROVEMENTS SHALL BE RESOLVED BY THE ENGINEER PRIOR TO BEGINNING ANY CONSTRUCTION OPERATIONS. THIS WORK BY THE CONTRACTOR SHALL BE CONSIDERED INCIDENTAL TO THE CONTRACT AND NO ADDITIONAL COMPENSATION SHALL BE ALLOWED.

3. PRIOR TO CONSTRUCTION, THE CONTRACTOR SHALL NOTIFY THE FOLLOWING UTILITY COMPANIES IF APPLICABLE.

F P & L - CHARLES ARTHUS, 561-742-2085
A T & T - ROBERT LOWEN, 561-357-6615
P. B. CO. WATER UTILITIES DEPT. - ADAM GALICKI, 561-493-6000
COMCAST - STEVEN ROSA, 561-454-5851
PALM BEACH COUNTY ENGINEERING DEPARTMENT - 561-684-4180
LAKE WORTH DRAINAGE DISTRICT - SHAUGHN WEBB, 561-498-5363
FLORIDA PUBLIC UTILITIES - NANI SANTIAGO, 561-838-1785
PBC TRAFFIC ENGINEERING SUPERINTENDENT - 561-233-3900

4. THE CONTRACTOR SHALL BE RESPONSIBLE FOR THE REPAIR AND RESTORATION OF EXISTING PAVEMENT, PIPES, CONDUITS, CABLES, ETC., AND LANDSCAPED AREAS DAMAGED AS A RESULT OF THE CONTRACTOR'S OPERATIONS AND/OR THOSE OF HIS SUBCONTRACTORS, AND SHALL RESTORE THEM PROMPTLY.

5. PRIOR TO FINAL ACCEPTANCE, THE CONTRACTOR SHALL SUPPLY THE ENGINEER OF RECORD WITH THE CERTIFICATION THAT ALL CONSTRUCTION AND MATERIALS MEET OR EXCEEDS THE DESIGN AND HAS BEEN INSTALLED PER THE DRAWINGS AND/OR AS-BUILT DRAWINGS.AS-BUILT DRAWINGS SHALL BE PREPARED BY THE CONTRACTOR.

6. THE CONTRACTOR SHALL COORDINATE THE WORK WITH OTHER CONTRACTORS IN THE AREA AND ANY OTHER UNDERGROUND CONDUIT REQUIRED FOR FP&L, SOUTHERN BELL, IRRIGATION SYSTEM, ETC. PRIOR TO BEGINNING SUBGRADE. THE CONTRACTOR SHALL COORDINATE RELOCATION OF ALL EXISTING UTILITIES WITH APPLICABLE UTILITY COMPANIES.

7. THE CONTRACTOR SHALL SUBMIT FIVE (5) SETS OF SHOP DRAWINGS FOR APPROVAL TO THE ENGINEER OF RECORD PRIOR TO FABRICATION OR CONSTRUCTION FOR ALL MATERIALS USED ON THE PROJECT. APPROVED SHOP DRAWINGS FROM THE ENGINEER SHALL THEN BE SUBMITTED TO THE COUNTY OR CITY FOR THEIR APPROVAL. NO CONSTRUCTION SHALL COMMENCE UNTIL THE APPROVED SHOP DRAWINGS HAVE BEEN OBTAINED BY THE CONTRACTOR FROM THE ENGINEER.

8. COMPLIANCE TO "TRENCH SAFETY ACT" IS REQUIRED FOR ALL EXCAVATIONS IN EXCESS OF 5 FEET DEEP.

9. GATE VALVES SHALL BE LOCATED ENTIRELY WITHIN THE PAVEMENT OR GRASS AND COMPLETELY OUTSIDE OF CURBS.

PALM BEACH COUNTY ROAD & BRIDGE NOTES

1. IF DURING THE PROPOSED CONSTRUCTION OR CROSSING OF ANY EXISTING PALM BEACH COUNTY STORM DRAIN PIPE / STRUCTURES ARE AFFECTED IN ANY WAY, PALM BEACH COUNTY ROAD & BRIDGE REQUIRES FULL RESTORATION OF THE AFFECTED SYSTEM TO LIKE OR BETTER THAN LIKE CONDITION AND TO PALM BEACH COUNTY / FDOT STANDARDS.

2. ALL AFFECTED ROADWAYS ARE TO BE RESTORED FROM EDGE OF PAVEMENT TO EDGE OF PAVEMENT, LANE WIDTH MINIMUM, AND 50' IN EITHER DIRECTION.

3. IF ANY ADDITIONAL LANES ARE AFFECTED FOR ANY REASON DURING CONSTRUCTION, PALM BEACH COUNTY ROAD & BRIDGE WILL REQUIRE THE ADDITIONAL LANES TO BE RESTORED TO LIKE OR BETTER THAN LIKE CONDITION AND TO EQUAL DIMENSIONS AS THE ADJACENT LANES.

4. IF PALM BEACH COUNTY SIDEWALK / PATHWAY / CURB & GUTTER / OR ADA FACILITIES ARE AFFECTED, PALM BEACH COUNTY ROAD & BRIDGE WILL REQUIRE RESTORATION OF ONE ADDITIONAL FLAG IN EITHER DIRECTION FROM THE POINT OF CONSTRUCTION AND TO BE LIKE OR BETTER THAN LIKE CONDITION AND CONSTRUCTED TO FDOT / PALM BEACH COUNTY STANDARDS.

5. ALL SWALES, MEDIANS AND GRASS AREAS ARE TO BE RESTORED TO LIKE OR BETTER THAN LIKE CONDITION.

TOWNHOUSE
PAD DETAIL FOR MASS EARTHWORK OPERATION
N.T.S.

NOTES:

1. BUILDING PAD SHALL BE BUILT WITH COMPACTED STRUCTURAL FILL ELEVEN (11) INCHES BELOW PROPOSED FINISHED FLOOR,FIVE FEET BEYOND THE BUILDING LIMITS SHOWN (PER FLORIDA BUILDING CODE). PROOF ROLL ENTIRE LOT.

2. GRADING TOLERANCE OF 0.1' ABOVE OR BELOW THE PAD GRADE.

3. PROOF ROLL ENTIRE SITE PRIOR TO PLACEMENT OF FILL AFTER CLEARING & GRUBBING AND CLEANSING & FILLING OF DITCHES PER THE GEOTECHNICAL REPORT.

ACCESSIBILITY NOTES:

1. CROSS SLOPE OF ALL ACCESSIBLE ROUTES CANNOT BE MORE THAN 2%, INCLUDING CURB RAMPS AND ASSOCIATED GUTTERS AND CROSS WALKS. WHERE GUTTERS MEET CURB RAMPS, RUNNING SLOPES MUST NOT EXCEED 5%.
2. RUNNING SLOPE ALONG ACCESSIBLE ROUTES MUST BE NO MORE THAN 5% IN THE DIRECTION OF TRAVEL. IF RUNNING SLOPES OF ACCESSIBLE ROUTES ARE MORE THAN 5%, THEN ALL RAMP CRITERIA APPLY.
3. RUNNING SLOPE OF RAMPS AND CURB RAMPS CANNOT EXCEED 8.33%. IF THE VERTICAL RISE IS LESS THAN 6 INCHES, HANDRAILS ARE NOT REQUIRED. SIDE FLARES OR CURB RAMPS MUST HAVE A RUNNING SLOPE NO MORE THAN 10%.
4. SLOPE AT THE INTERSECTIONS OF ACCESSIBLE ROUTES CANNOT EXCEED 2% WHEN MEASURED IN ANY DIRECTION.
5. THE GROUND SURFACE OF THE ENTIRE ACCESSIBLE PARKING SPACES AND THE ADJACENT ACCESS AISLE SERVING THE SPACE CANNOT EXCEED 2% WHEN MEASURED IN ANY DIRECTION. WHERE GUTTERS ARE PART OF THE ACCESSIBLE PARKING SPACE, THE GUTTERS MUST HAVE A SLOPE NO MORE THAN 2%: OTHERWISE, THEY MUST BE LOCATED OUTSIDE OF THE MINIMUM AREA REQUIRED FOR AN ACCESSIBLE PARKING SPACE AND THE ADJACENT ACCESS AISLE SERVING THE SPACE.
6. THE GROUND SURFACE AT THE MANEUVERING CLEARANCE OF DOORS THAT ARE PART OF THE ACCESSIBLE ROUTE CANNOT EXCEED 2% WHEN MEASURED IN ANY DIRECTION, FOR THE WIDTH OF THE DOOR BY 60 INCHES MEASURED PERPENDICULAR TO THE DOOR WALL.
7. SLOPE OF CLEAR FLOOR SPACES FOR FIXTURES AND CONTROLS MUST BE NO MORE THAN 2% WHEN MEASURED IN ANY DIRECTION. FOR EXAMPLE, THE 30X48-INCH CLEAR FLOOR SPACE PROVIDED FOR THE PARKING METER OR A MAGNETIC CARD READER MUST BE FLUSH AND ADJACENT TO THE METER OR THE CARD READER.
8. LEVEL CHANGES BETWEEN GROUND SURFACE MATERIALS; E.G.: PAVERS TO CONCRETE MUST BE NO MORE THAN 1/4-INCH HIGH. LEVEL CHANGES GREATER THAN 1/4-INCH HIGH MUST BE BEVELED WITH A SLOPE THAT DOES NOT EXCEED 1:2 FOR A LEVEL CHANGE UP TO 1/2-INCH HIGH. IF THERE IS A LEVEL CHANGE GREATER THAN 1/2-INCH, THEN THE LEVEL CHANGE MUST BE RAMPED AND COMPLY WITH THE RAMP CRITERIA.
9. GAPS OR OPENINGS ALONG THE ACCESSIBLE ROUTE MUST BE NO MORE THAN 1/2-INCH WIDE.
10. MINIMUM WIDTH OF ACCESSIBLE ROUTE IS 36".
11. ALL HANDICAP RAMPS SHALL BE INSTALLED PER FDOT INDEX 304.

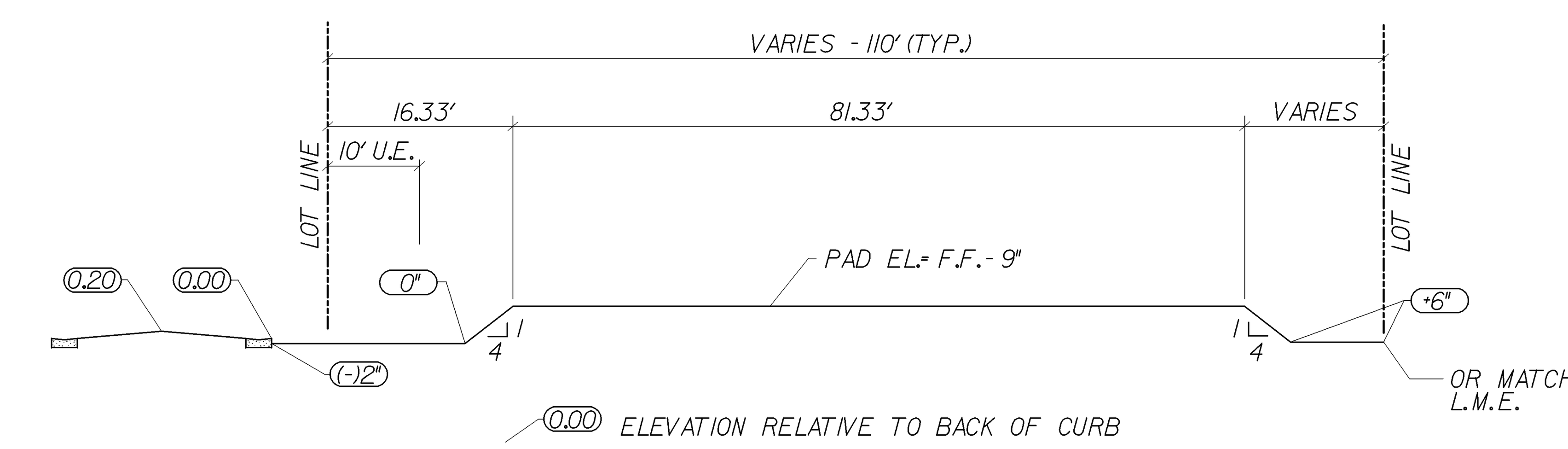

PROFILE VIEW

35' PRODUCT (45'x110' LOTS)
PAD DETAIL FOR MASS EARTHWORK OPERATION
N.T.S.

NOTES:

1. ALL LOTS SHALL BE CONSTRUCTED AS STRIP PADS.
2. PADS BUILT WITH COMPACTED STRUCTURAL FILL TO FIVE FEET BEYOND THE BUILDING LIMITS (PER FLORIDA BUILDING CODE). PROOF ROLL ENTIRE LOT.
3. GRADING TOLERANCE OF 0.1' ABOVE OR BELOW THE PAD GRADE NOTED ON THE DETAIL.
4. PROOF ROLL ENTIRE SITE LESS THE LAKES PRIOR TO PLACEMENT OF FILL AFTER CLEANSING & FILLING OF DITCHES PER GEOTECH.

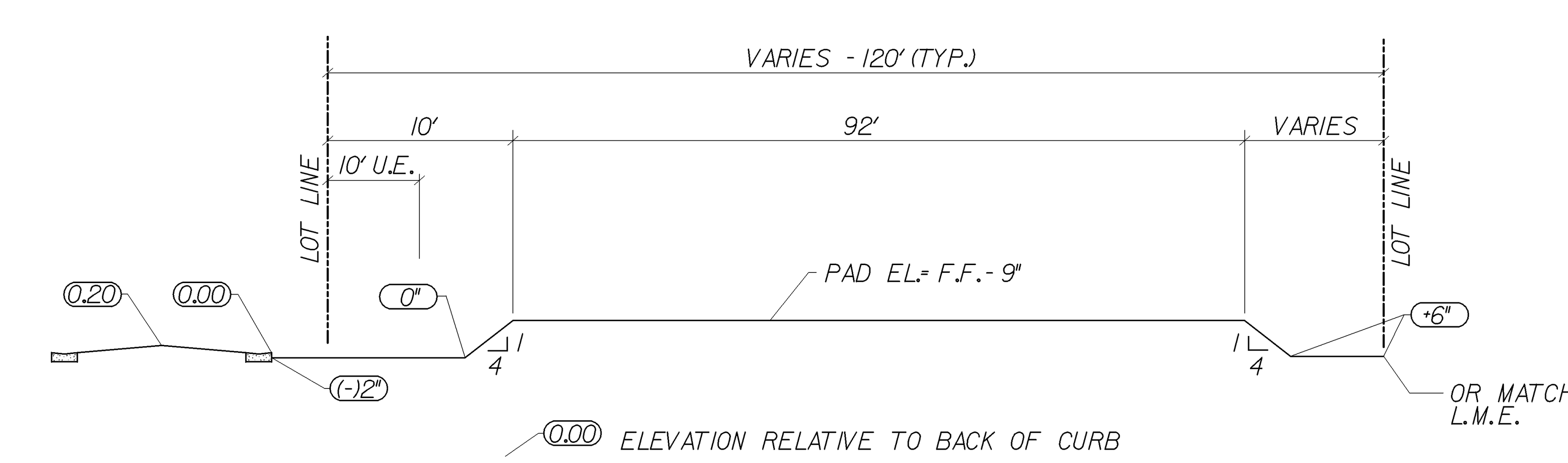

PROFILE VIEW

40' PRODUCT (50'x120' LOTS)
PAD DETAIL FOR MASS EARTHWORK OPERATION
N.T.S.

NOTES:

1. ALL LOTS SHALL BE CONSTRUCTED AS STRIP PADS.
2. PADS BUILT WITH COMPACTED STRUCTURAL FILL TO FIVE FEET BEYOND THE BUILDING LIMITS (PER FLORIDA BUILDING CODE). PROOF ROLL ENTIRE LOT.
3. GRADING TOLERANCE OF 0.1' ABOVE OR BELOW THE PAD GRADE NOTED ON THE DETAIL.
4. PROOF ROLL ENTIRE SITE LESS THE LAKES PRIOR TO PLACEMENT OF FILL AFTER CLEANSING & FILLING OF DITCHES PER GEOTECH.

SCHNARS ENGINEERING CORPORATION
947 Clint Moore Road
Boca Raton, Florida 33487
Certificate of Authorization #6640
Tel: (561) 241-6455
Fax: (561) 241-5182

OWNER: PULTE HOMES CORPORATION, 1400 INDIAN CREEK PARKWAY, JUPITER, FLORIDA 33458

PROJECT: GULFSTREAM POLO PROPERTIES PUD, PALM BEACH COUNTY, FLORIDA

TASK: CONSTRUCTION DETAILS

ORIGINAL: JANUARY 2016
REVISIONS: 1 ___ 2 ___ 3 ___ 4 ___ 5 ___ 6 ___ 7 ___ 8 ___ 9 ___ 10 ___ 11 ___ 12 ___

SEAL
Jeffrey T. Schnars, P.E. Civil Engineer Florida Registration No. 46697 (FOR THE FIRM)

JOB NO.	14132
DRAWN	RAD
DESIGNED	JTS
CHECKED	JWM
Q.C.	JTS
SHEET	6 OF 7

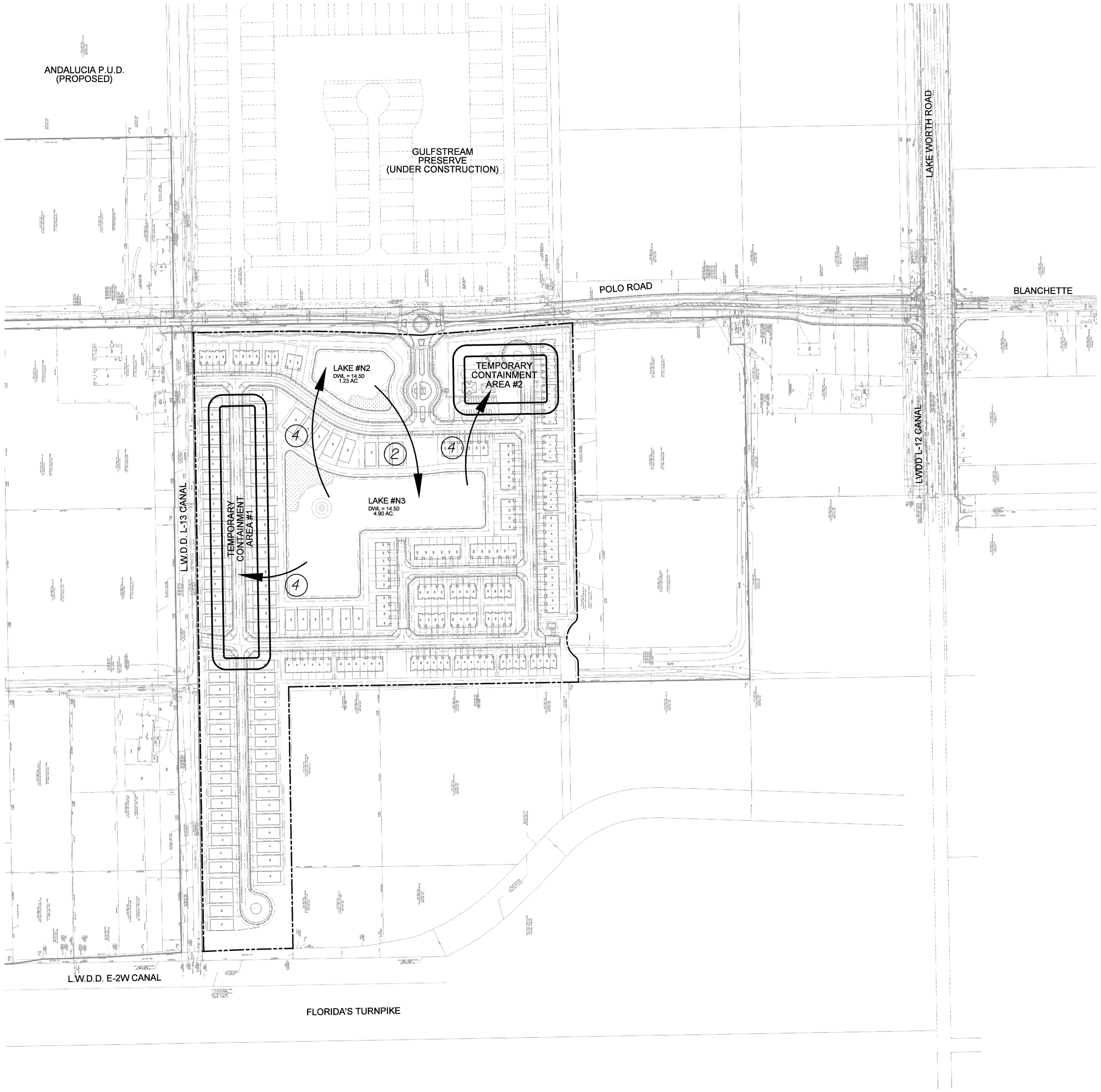

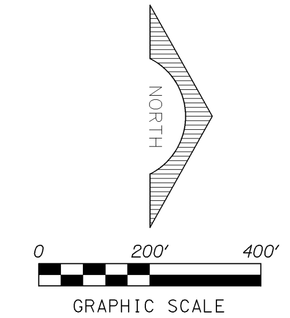

ALL ELEVATIONS ARE RELATIVE TO N.A.V.D. 1988

NORTH BASIN EARTHWORK DEWATERING STEPS:

1. EXCAVATE LAKE #N3 TO EL= 14.5
2. DEWATER LAKE #N2 INTO LAKE #N3 AREA
3. EXCAVATE LAKE #N2 BELOW EL= 14.5
4. DEWATER LAKE #N3 INTO CONTAINMENT AREA #1 UNTIL FULL THEN INTO LAKE #N2 & CONTAINMENT AREA #2
5. EXCAVATE LAKE #N3 BELOW EL= 14.5

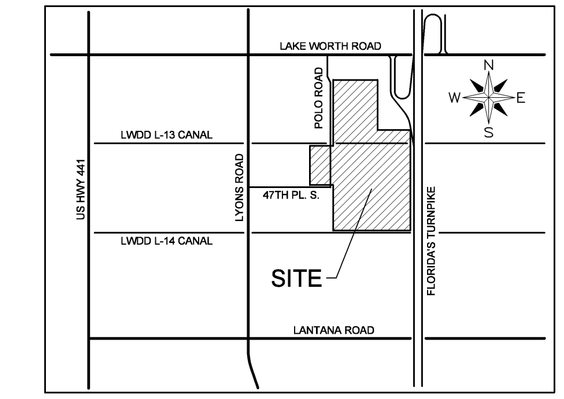

LOCATION MAP
SEC 29, TWP 44S, RGE 42E
NOT TO SCALE

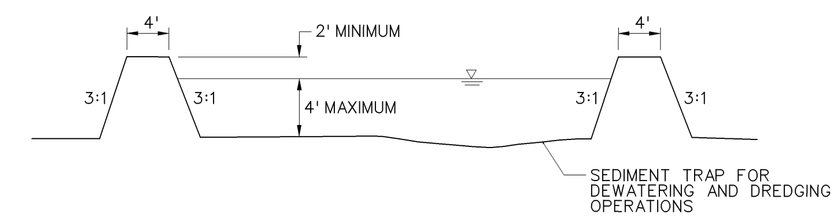

TEMPORARY SEDIMENT TRAP DETAIL
N.T.S.

SCHNARS
ENGINEERING CORPORATION
947 Clint Moore Road
Boca Raton, Florida 33487
Certificate of Authorization #6640
Tel: (561) 241-6455
Fax: (561) 241-5182

OWNER: PULTE HOMES CORPORATION
1400 INDIAN CREEK PARKWAY
JUPITER, FLORIDA 33458

PROJECT: GULFSTREAM POLO PROPERTIES PUD
PLAT ONE
PALM BEACH COUNTY FLORIDA

TASK: EARTHWORK
CONSTRUCTION DEWATERING PLAN

ORIGINAL: JANUARY 2016
REVISIONS:
1 2/26/16 PER SFWMD
2 3/22/16 PER SFWMD
3
4
5
6
7
8
9
10
11
12

SEAL

Jeffrey T. Schnars, P.E.
Civil Engineer
Florida Registration No. 46697
FOR THE FIRM

JOB NO. 14132
DRAWN RAD
DESIGNED JTS
CHECKED JWM
Q.C. JTS
SHEET 7 OF 7

3/30/2016 4:00:00 AM
FILE:

STAFF REPORT DISTRIBUTION LIST

GULFSTREAM POLO PROPERTIES P U D

Application No: 160215-23

Permit No: 50-11013-P

INTERNAL DISTRIBUTION

X Joseph D. Santangelo
X Melinda Parrott
X Carlos A. de Rojas, P.E.
X Ricardo A. Valera, P.E.
X A. Waterhouse, P.E.
X J. Markle, P.E.

EXTERNAL DISTRIBUTION

X Permittee - Pulte Home Corporation
X Engr Consultant - Schnars Engineering Corporation
X Env Consultant - E W Constultants Inc

GOVERNMENT AGENCIES

X Danielle Slaterpryce, P.E., Assistant City Administrator
X Div of Recreation and Park - District 5 - Miranda Cunningham, FDEP
X Palm Beach County - Environmental Res Management
X Palm Beach County - Health Dept Environmental Health & Engineering
X Palm Beach County - Water Utilities Operations Center
X Palm Beach County School District of Palm Beach County
X Palm Beach County Engineer

SOUTH FLORIDA WATER MANAGEMENT DISTRICT
ENVIRONMENTAL RESOURCE PERMIT NO. 50-11013-P
DATE ISSUED:July 12, 2016

PERMITTEE: PULTE HOME CORPORATION
1400 INDIAN CREEK PARKWAY
JUPITER, FL 33458

PROJECT DESCRIPTION: Construction and operation of a stormwater management system serving 52.60 acres of phased residential development for a project known as Fields at Gulfstream Polo Plat One.

PROJECT LOCATION: PALM BEACH COUNTY, SEC 29 TWP 44S RGE 42E

PERMIT DURATION: See Special Condition No:1.

This is to notify you of the District's agency action for Permit Application No. 160617-4, dated June 17, 2016. This action is taken pursuant to the provisions of Chapter 373, Part IV, Florida Statues (F.S).

Based on the information provided, District rules have been adhered to and an Environmental Resource Permit is in effect for this project subject to:

1. Not receiving a filed request for a Chapter 120, Florida Statutes, administrative hearing.
2. the attached 18 General Conditions (See Pages : 2 - 4 of 6),
3. the attached 10 Special Conditions (See Pages : 5 - 6 of 6) and
4. the attached 3 Exhibit(s)

Should you object to these conditions, please refer to the attached "Notice of Rights" which addresses the procedures to be followed if you desire a public hearing or other review of the proposed agency action. Please contact this office if you have any questions concerning this matter. If we do not hear from you in accordance with the "Notice of Rights," we will assume that you concur with the District's action.

CERTIFICATE OF SERVICE

I HEREBY CERTIFY THAT this written notice has been mailed or electronically transmitted to the Permittee (and the persons listed in the attached distribution list) this 12th day of July, 2016, in accordance with Section 120.60(3), F.S. Notice was also electronically posted on this date through a link on the home page of the District's website (my.sfwmd.gov/ePermitting).

BY:_____
Ricardo A. Valera, P.E.
Bureau Chief - Environmental Resource
Regulation Division

GENERAL CONDITIONS

1. All activities shall be implemented following the plans, specifications and performance criteria approved by this permit. Any deviations must be authorized in a permit modification in accordance with Rule 62-330.315, F.A.C. Any deviations that are not so authorized shall subject the permittee to enforcement action and revocation of the permit under Chapter 373, F.S.

2. A complete copy of this permit shall be kept at the work site of the permitted activity during the construction phase, and shall be available for review at the work site upon request by the Agency staff. The permittee shall require the contractor to review the complete permit prior to beginning construction.

3. Activities shall be conducted in a manner that does not cause or contribute to violations of state water quality standards. Performance-based erosion and sediment control best management practices shall be installed immediately prior to, and be maintained during and after construction as needed, to prevent adverse impacts to the water resources and adjacent lands. Such practices shall be in accordance with the "State of Florida Erosion and Sediment Control Designer and Reviewer Manual" (Florida Department of Environmental Protection and Florida Department of Transportation June 2007), and the "Florida Stormwater Erosion and Sedimentation Control Inspector's Manual" (Florida Department of Environmental Protection, Nonpoint Source Management Section, Tallahassee, Florida, July 2008), unless a project-specific erosion and sediment control plan is approved or other water quality control measures are required as part of the permit.

4. At least 48 hours prior to beginning the authorized activities, the permittee shall submit to the Agency a fully executed Form 62-330.350(1), "Construction Commencement Notice" indicating the expected start and completion dates. If available, an Agency website that fulfills this notification requirement may be used in lieu of the form.

5. Unless the permit is transferred under Rule 62-330.340, F.A.C., or transferred to an operating entity under Rule 62-330.310, F.A.C., the permittee is liable to comply with the plans, terms and conditions of the permit for the life of the project or activity.

6. Within 30 days after completing construction of the entire project, or any independent portion of the project, the permittee shall provide the following to the Agency, as applicable:
   a. For an individual, private single-family residential dwelling unit, duplex, triplex, or quadruplex- "Construction Completion and Inspection Certification for Activities Associated With a Private Single-Family Dwelling Unit"[Form 62-330.310(3)]; or
   b. For all other activities- "As-Built Certification and Request for Conversion to Operational Phase" [Form 62-330.310(1)].
   c. If available, an Agency website that fulfills this certification requirement may be used in lieu of the form.

7. If the final operation and maintenance entity is a third party:
   a. Prior to sales of any lot or unit served by the activity and within one year of permit issuance, or within 30 days of as- built certification, whichever comes first, the permittee shall submit, as applicable, a copy of the operation and maintenance documents (see sections 12.3 thru 12.3.3 of Applicant's Handbook Volume I) as filed with the Department of State, Division of Corporations and a copy of any easement, plat, or deed restriction needed to operate or maintain the project, as recorded with the Clerk of the Court in the County in which the activity is located.
   b. Within 30 days of submittal of the as- built certification, the permittee shall submit "Request for Transfer of Environmental Resource Permit to the Perpetual Operation Entity" [Form 62-330.310(2)] to transfer the permit to the operation and maintenance entity, along with the documentation requested in the form. If available, an Agency website that fulfills this transfer requirement may be used in lieu of the form.

8. The permittee shall notify the Agency in writing of changes required by any other regulatory agency that

GENERAL CONDITIONS

require changes to the permitted activity, and any required modification of this permit must be obtained prior to implementing the changes.

9. This permit does not:
a. Convey to the permittee any property rights or privileges, or any other rights or privileges other than those specified herein or in Chapter 62-330, F.A.C.;
b. Convey to the permittee or create in the permittee any interest in real property;
c. Relieve the permittee from the need to obtain and comply with any other required federal, state, and local authorization, law, rule, or ordinance; or
d. Authorize any entrance upon or work on property that is not owned, held in easement, or controlled by the permittee.

10. Prior to conducting any activities on state-owned submerged lands or other lands of the state, title to which is vested in the Board of Trustees of the Internal Improvement Trust Fund, the permittee must receive all necessary approvals and authorizations under Chapters 253 and 258, F.S. Written authorization that requires formal execution by the Board of Trustees of the Internal Improvement Trust Fund shall not be considered received until it has been fully executed.

11. The permittee shall hold and save the Agency harmless from any and all damages, claims, or liabilities that may arise by reason of the construction, alteration, operation, maintenance, removal, abandonment or use of any project authorized by the permit.

12. The permittee shall notify the Agency in writing:
a. Immediately if any previously submitted information is discovered to be inaccurate; and
b. Within 30 days of any conveyance or division of ownership or control of the property or the system, other than conveyance via a long-term lease, and the new owner shall request transfer of the permit in accordance with Rule 62-330.340, F.A.C. This does not apply to the sale of lots or units in residential or commercial subdivisions or condominiums where the stormwater management system has been completed and converted to the operation phase.

13. Upon reasonable notice to the permittee, Agency staff with proper identification shall have permission to enter, inspect, sample and test the project or activities to ensure conformity with the plans and specifications authorized in the permit.

14. If any prehistoric or historic artifacts, such as pottery or ceramics, stone tools or metal implements, dugout canoes, or any other physical remains that could be associated with Native American cultures, or early colonial or American settlement are encountered at any time within the project site area, work involving subsurface disturbance in the immediate vicinity of such discoveries shall cease. The permittee or other designee shall contact the Florida Department of State, Division of Historical Resources, Compliance and Review Section, at (850) 245-6333 or (800) 847-7278, as well as the appropriate permitting agency office. Such subsurface work shall not resume without verbal or written authorization from the Division of Historical Resources. If unmarked human remains are encountered, all work shall stop immediately and notification shall be provided in accordance with Section 872.05, F.S.

15. Any delineation of the extent of a wetland or other surface water submitted as part of the permit application, including plans or other supporting documentation, shall not be considered binding unless a specific condition of this permit or a formal determination under Rule 62-330.201, F.A.C., provides otherwise.

16. The permittee shall provide routine maintenance of all components of the stormwater management system to remove trapped sediments and debris. Removed materials shall be disposed of in a landfill or other

GENERAL CONDITIONS

uplands in a manner that does not require a permit under Chapter 62-330, F.A.C., or cause violations of state water quality standards.

17. This permit is issued based on the applicant's submitted information that reasonably demonstrates that adverse water resource-related impacts will not be caused by the completed permit activity. If any adverse impacts result, the Agency will require the permittee to eliminate the cause, obtain any necessary permit modification, and take any necessary corrective actions to resolve the adverse impacts.

18. A Recorded Notice of Environmental Resource Permit may be recorded in the county public records in accordance with Rule 62-330.090(7), F.A.C. Such notice is not an encumbrance upon the property.

SPECIAL CONDITIONS

1. The construction phase of this permit shall expire on July 12, 2021.

2. Operation and maintenance of the stormwater management system shall be the responsibility of FIELDS AT GULFSTREAM POLO HOMEOWNERS ASSOCIATION. Within one year of permit issuance or concurrent with the engineering certification of construction completion, whichever comes first, the permittee shall submit a copy of the recorded deed restrictions (or declaration of condominium, if applicable), a copy of the filed articles of incorporation, and a copy of the certificate of incorporation for the association.

3. Discharge Facilities:

   1-4' WIDE SHARP CRESTED weir with crest at elev. 18.45' NAVD 88.
   1-1.1' W X .75' H RECTANGULAR NOTCH with invert at elev. 14.5' NAVD 88.

   Receiving body : LWDD L-13 Canal
   Control elev : 14.5 feet NAVD 88.

4. Lake side slopes shall be no steeper than 4:1 (horizontal:vertical) to a depth of two feet below the control elevation. Side slopes shall be nurtured or planted from 2 feet below to 1 foot above control elevation to insure vegetative growth, unless shown on the plans.

5. A stable, permanent and accessible elevation reference shall be established on or within one hundred (100) feet of all permitted discharge structures no later than the submission of the certification report. The location of the elevation reference must be noted on or with the certification report.

6. The following are exhibits to this permit:

   Exhibit No. 1 Location Map
   Exhibit No. 2 Land Use Summary Tables
   Exhibit No. 3 Paving, Grading & Erosion Control Plans

7. Prior to initiating construction activities associated with this Environmental Resource Permit (ERP), the permittee is required to hold a pre-construction meeting with field representatives, consultants, contractors, District Environmental Resource Compliance (ERC) staff, and any other local government entities as necessary.

   The purpose of the pre-construction meeting is to discuss construction methods, sequencing, best management practices, identify work areas, staking and roping of preserves where applicable, and to facilitate coordination and assistance amongst relevant parties.

   To schedule a pre-construction meeting, please contact ERC staff from the West Palm Beach Office at (561) 686-8800 or via e-mail at: pre-con@sfwmd.gov. When sending a request for a pre-construction meeting, please include the application number, permit number, and contact name and phone number.

8. Minimum building floor elevation: 19.5 feet NAVD

9. Minimum road crown elevation: 17.7 feet NAVD

10. The operable structure shall remain locked at all times unless specific approval is granted by the Lake Worth Drainage District (LWDD) for its operation. At no time shall the structure be operated to bypass the water quality detention requirements or to lower the lake levels below the permitted control elevation for the project. If for whatever reason, it is determined that the permittee has not complied with the directives

SPECIAL CONDITIONS

of the LWDD, and/or has operated the structure contrary to the intended purpose of an emergency outflow (when canal conditions permit), the structure shall be modified to permanently prevent operation of the structure. In addition, the structure shall be equipped with a locking mechanism to prevent unauthorized use. A staff gage shall be installed upstream of the structure so that lake levels within the project can be quickly determined.

NOTICE OF RIGHTS

As required by Sections 120.569 and 120.60(3), Fla. Stat., the following is notice of the opportunities which may be available for administrative hearing or judicial review when the substantial interests of a party are determined by an agency. Please note that this Notice of Rights is not intended to provide legal advice. Not all of the legal proceedings detailed below may be an applicable or appropriate remedy. You may wish to consult an attorney regarding your legal rights.

RIGHT TO REQUEST ADMINISTRATIVE HEARING

A person whose substantial interests are or may be affected by the South Florida Water Management District's (SFWMD or District) action has the right to request an administrative hearing on that action pursuant to Sections 120.569 and 120.57, Fla. Stat. Persons seeking a hearing on a SFWMD decision which affects or may affect their substantial interests shall file a petition for hearing with the Office of the District Clerk of the SFWMD, in accordance with the filing instructions set forth herein, within 21 days of receipt of written notice of the decision, unless one of the following shorter time periods apply: (1) within 14 days of the notice of consolidated intent to grant or deny concurrently reviewed applications for environmental resource permits and use of sovereign submerged lands pursuant to Section 373.427, Fla. Stat.; or (2) within 14 days of service of an Administrative Order pursuant to Section 373.119(1), Fla. Stat. "Receipt of written notice of agency decision" means receipt of written notice through mail, electronic mail, or posting that the SFWMD has or intends to take final agency action, or publication of notice that the SFWMD has or intends to take final agency action. Any person who receives written notice of a SFWMD decision and fails to file a written request for hearing within the timeframe described above waives the right to request a hearing on that decision.

If the District takes final agency action which materially differs from the noticed intended agency decision, persons who may be substantially affected shall, unless otherwise provided by law, have an additional Rule 28-106.111, Fla. Admin. Code, point of entry.

Any person to whom an emergency order is directed pursuant to Section 373.119(2), Fla. Stat., shall comply therewith immediately, but on petition to the board shall be afforded a hearing as soon as possible.

A person may file a request for an extension of time for filing a petition. The SFWMD may, for good cause, grant the request. Requests for extension of time must be filed with the SFWMD prior to the deadline for filing a petition for hearing. Such requests for extension shall contain a certificate that the moving party has consulted with all other parties concerning the extension and that the SFWMD and any other parties agree to or oppose the extension. A timely request for an extension of time shall toll the running of the time period for filing a petition until the request is acted upon.

FILING INSTRUCTIONS

A petition for administrative hearing must be filed with the Office of the District Clerk of the SFWMD. Filings with the Office of the District Clerk may be made by mail, hand-delivery, or e-mail. Filings by facsimile will not be accepted. A petition for administrative hearing or other document is deemed filed upon receipt during normal business hours by the Office of the District Clerk at SFWMD headquarters in West Palm Beach, Florida. The District's normal business hours are 8:00 a.m. – 5:00 p.m., excluding weekends and District holidays. Any document received by the Office of the District Clerk after 5:00 p.m. shall be deemed filed as of 8:00 a.m. on the next regular business day. Additional filing instructions are as follows:

- Filings by mail must be addressed to the Office of the District Clerk, P.O. Box 24680, West Palm Beach, Florida 33416.

- Filings by hand-delivery must be delivered to the Office of the District Clerk. Delivery of a petition to the SFWMD's security desk does not constitute filing. It will be necessary to request that the SFWMD's security officer contact the Office of the District Clerk. An employee of the SFWMD's Clerk's office will receive and file the petition.
- Filings by e-mail must be transmitted to the Office of the District Clerk at clerk@sfwmd.gov. The filing date for a document transmitted by electronic mail shall be the date the Office of the District Clerk receives the complete document. A party who files a document by e-mail shall (1) represent that the original physically signed document will be retained by that party for the duration of the proceeding and of any subsequent appeal or subsequent proceeding in that cause and that the party shall produce it upon the request of other parties; and (2) be responsible for any delay, disruption, or interruption of the electronic signals and accepts the full risk that the document may not be properly filed.

INITIATION OF AN ADMINISTRATIVE HEARING

Pursuant to Sections 120.54(5)(b)4. and 120.569(2)(c), Fla. Stat., and Rules 28-106.201 and 28-106.301, Fla. Admin. Code, initiation of an administrative hearing shall be made by written petition to the SFWMD in legible form and on 8 1/2 by 11 inch white paper. All petitions shall contain:

1. Identification of the action being contested, including the permit number, application number, SFWMD file number or any other SFWMD identification number, if known.
2. The name, address, any email address, any facsimile number, and telephone number of the petitioner and petitioner's representative, if any.
3. An explanation of how the petitioner's substantial interests will be affected by the agency determination.
4. A statement of when and how the petitioner received notice of the SFWMD's decision.
5. A statement of all disputed issues of material fact. If there are none, the petition must so indicate.
6. A concise statement of the ultimate facts alleged, including the specific facts the petitioner contends warrant reversal or modification of the SFWMD's proposed action.
7. A statement of the specific rules or statutes the petitioner contends require reversal or modification of the SFWMD's proposed action.
8. If disputed issues of material fact exist, the statement must also include an explanation of how the alleged facts relate to the specific rules or statutes.
9. A statement of the relief sought by the petitioner, stating precisely the action the petitioner wishes the SFWMD to take with respect to the SFWMD's proposed action.

MEDIATION

The procedures for pursuing mediation are set forth in Section 120.573, Fla. Stat., and Rules 28-106.111 and 28-106.401–.405, Fla. Admin. Code. The SFWMD is not proposing mediation for this agency action under Section 120.573, Fla. Stat., at this time.

RIGHT TO SEEK JUDICIAL REVIEW

Pursuant to Section 120.68, Fla. Stat., and in accordance with Florida Rule of Appellate Procedure 9.110, a party who is adversely affected by final SFWMD action may seek judicial review of the SFWMD's final decision by filing a notice of appeal with the Office of the District Clerk of the SFWMD in accordance with the filing instructions set forth herein within 30 days of rendition of the order to be reviewed, and by filing a copy of the notice with the clerk of the appropriate district court of appeal.

Last Date For Agency Action: August 16, 2016

INDIVIDUAL ENVIRONMENTAL RESOURCE PERMIT STAFF REPORT

Project Name: Fields At Gulfstream Polo Plat One

Permit No.: 50-11013-P

Application No.: 160617-4

Application Type: Environmental Resource (Conceptual Approval Modification And New Construction/Operation)

Location: Palm Beach County, S29/T44S/R42E

Permittee : Pulte Home Corporation

Operating Entity : Fields At Gulfstream Polo Homeowners Association

Project Area: 52.60 acres

Permit Area: 237.93 acres

Project Land Use: Residential

Drainage Basin: C-16

Receiving Body: LWDD L-13 Canal **Class:** CLASS III

Special Drainage District: Lake Worth Drainage District

Conservation Easement To District : No

Sovereign Submerged Lands: No

PROJECT SUMMARY:

This Environmental Resource Permit authorizes construction and operation of a stormwater management system serving 52.60 acres of phased residential development for a project known as Fields at Gulfstream Polo Plat One.

Construction of a residential phase within a previously approved Conceptual Permit (Application No. 160215-23). This 52.60 acre phase lies within the 79.96 acre North Basin of the 237.93 acre overall Gulfstream Polo development (see Exhibit No. 3).

Issuance of this permit constitutes certification of compliance with state water quality standards in accordance with Rule 62-330.062 Florida Administrative Code (F.A.C.).

PROJECT EVALUATION:

PROJECT SITE DESCRIPTION:

The site is located south of Lake Worth Road, east of Polo Club Road, west of the Turnpike, and north of 45th Street South, in unincorporated Palm Beach County. Refer to Exhibit 1 for a location map.

This site lies within the North Basin of a 237.93 acre residential subdivision conceptually approved under Application No. 160215-23. Construction of the lakes and site grading was also authorized under said application.

For information on the wetlands and surface waters within the project, please refer to the Wetlands and Surface Waters section of this staff report.

LAND USE:

See Exhibit No. 2 for land use summary tables.

WATER QUANTITY :

Discharge Rate :

The project is consistent with the land use and site grading assumptions from the design of the master stormwater management system. Therefore, the stormwater management system has not been designed to limit discharge for the design event to a specified rate.

Control Elevation :

Basin	Area (Acres)	Ctrl Elev (ft, NAVD 88)	WSWT Ctrl Elev (ft, NAVD 88)	Method Of Determination
Site	52.60	14.5	14.50	Previously Permitted

Receiving Body :

Basin	Str.#	Receiving Body
Site	CS-1	LWDD L-13 Canal

Discharge Structures: Note: The units for all the elevation values of structures are (ft, NAVD 88)

Bleeders:

Basin	Str#	Count	Type	Width	Height	Length	Dia.	Invert Angle	Invert Elev.
Site	CS-1	1	Rectangular Notch	1.1'	.75'				14.5

Weirs:

Basin	Str#	Count	Type	Width	Height	Length	Dia.	Elev.
Site	CS-1	1	Sharp Crested	4'				18.45 (crest)

WATER QUALITY :

Water quality treatment will be provided within the master lake system permitted under Application No. 160215-23.

The project also includes implementation of an Erosion Control Plan (Exhibit No. 3) as additional reasonable assurance of compliance with water quality criteria during construction and operation.

WETLANDS:

Wetlands And Other Surface Waters:

Impacts to 0.48 acre of wetlands and 13.3 acres of other surface waters were authorized under Application No. 160215-23. Mitigation was not required. No additional impacts to wetlands or other surface waters are expected to occur as a result of the proposed activities.

CERTIFICATION, OPERATION, AND MAINTENANCE:

Pursuant to Chapter 62-330.310 Florida Administrative Code (F.A.C.), Individual Permits will not be converted from the construction phase to the operation phase until construction completion certification of the project is submitted to and accepted by the District. This includes compliance with all permit conditions, except for any long term maintenance and monitoring requirements. It is suggested that the permittee retain the services of an appropriate professional registered in the State of Florida for periodic observation of construction of the project.

For projects permitted with an operating entity that is different from the permittee, it should be noted that until the construction completion certification is accepted by the District and the permit is transferred to an acceptable operating entity pursuant to Sections 12.1-12.3 of the Applicant's Handbook Volume I and Section 62-330.310, F.A.C., the permittee is liable for operation and maintenance in compliance with the terms and conditions of this permit.

In accordance with Section 373.416(2), F.S., unless revoked or abandoned, all stormwater management systems and works permitted under Part IV of Chapter 373, F.S., must be operated and maintained in perpetuity.

The efficiency of stormwater management systems, dams, impoundments, and most other project components will decrease over time without periodic maintenance. The operation and maintenance entity must perform periodic inspections to identify if there are any deficiencies in structural integrity, degradation due to insufficient maintenance, or improper operation of projects that may endanger public health, safety, or welfare, or the water resources. If deficiencies are found, the operation and maintenance entity will be responsible for correcting the deficiencies in a timely manner to prevent compromises to flood protection and water quality. See Section 12.4 of Applicant's Handbook Volume I for Minimum Operation and Maintenance Standards.

RELATED CONCERNS:

Water Use Permit Status:

Water Use Permit No. 50-11076-W, for irrigation has been issued

Water Use Permit No. 50-11036-W, for dewatering has been issued.

This permit does not release the permittee from obtaining all necessary Water Use authorization(s) prior to the commencement of activities which will require such authorization, including construction dewatering and irrigation.

CERP:

The proposed project is not located within or adjacent to a Comprehensive Everglades Restoration Project component.

Potable Water Supplier:

Palm Beach County Utilities

Waste Water System/Supplier:

Palm Beach County Utilities

Right-Of-Way Permit Status:

A District Right-of-Way Permit is not required for this project.

Historical/Archeological Resources:

During the review of Application No. 160215-19, the District received correspondence from the Florida Department of State, Division of Historical Resources, indicating that no significant archaeological or historical resources are recorded in the project area and the project is therefore unlikely to have an effect upon any such properties. This permit does not release the permittee from compliance with any other agencies' requirements in the event that historical and/or archaeological resources are found on the site.

DEO/CZM Consistency Review:

The issuance of this permit constitutes a finding of consistency with the Florida Coastal Management Program.

Third Party Interest:

No third party has contacted the District with concerns about this application.

Enforcement:

There has been no enforcement activity associated with this application.

STAFF REVIEW:

DIVISION APPROVAL:

NATURAL RESOURCE MANAGEMENT:

Barbara J. Conmy

DATE: 08 Jul 2016

SURFACE WATER MANAGEMENT:

Carlos A. de Rojas, P.E.

DATE: 08-Jul-2016

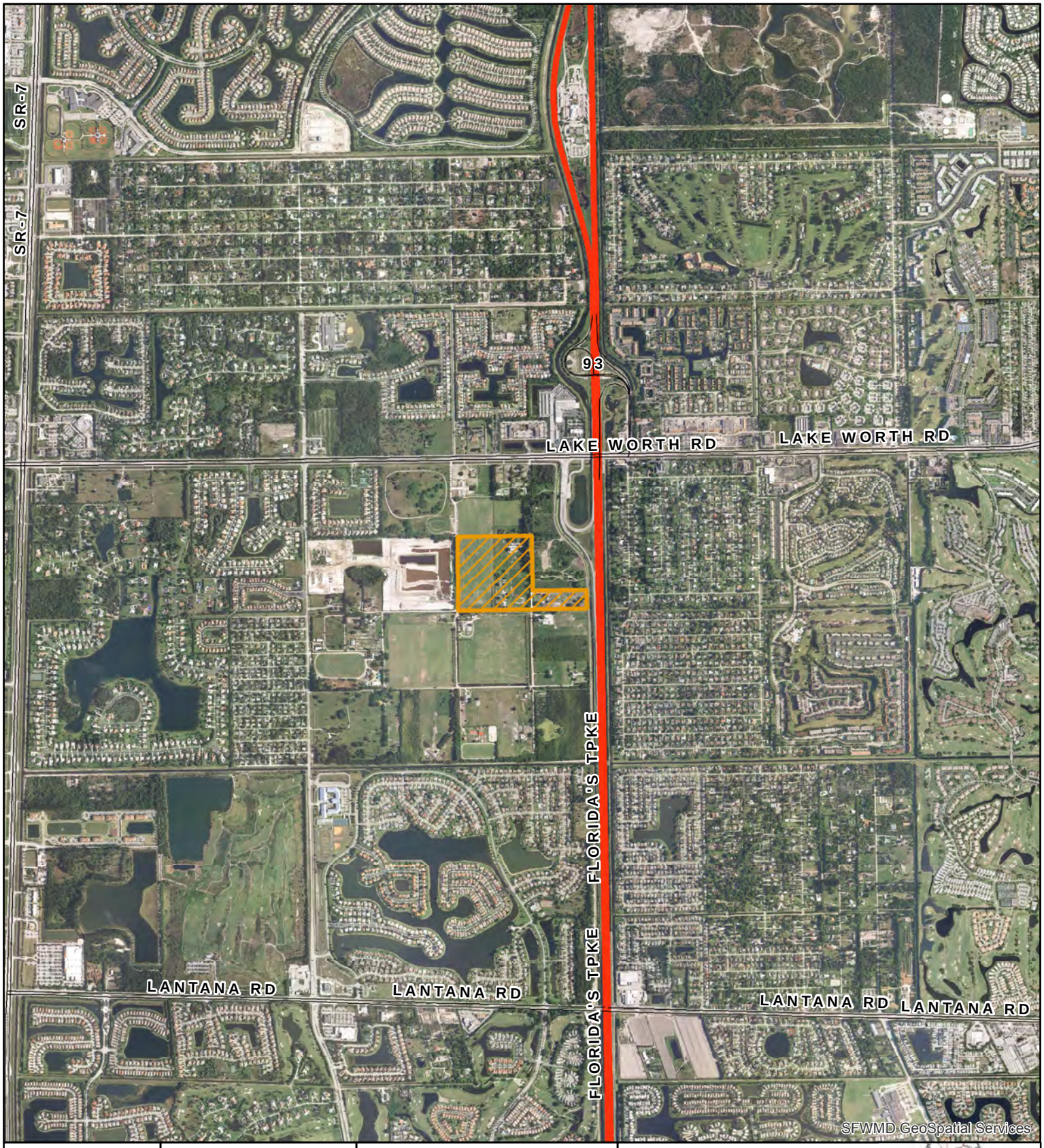

Exhibit No: 1	Exhibit Created On: 2016-07-06	PALM BEACH COUNTY, FL

REGULATION DIVISION

Project Name: FIELDS AT GULFSTREAM POLO PLAT ONE

0 2,150 4,300 Feet

N

Application

Permit No: 50-11013-P

Application Number: 160617-4

Created by

South Florida Water Management District

Fields at Gulfstream Polo – Plat One

SFWMD Conceptual Permit No. 50-11013-P

North Basin

Land Use	This Phase	Revised Total North Basin	Previously Permitted Total
Building	10.63	15.79	15.70
Other Imp.	13.98	24.74	26.07
Lake	6.29	8.26	8.10
Lake Bank	2.65	3.99	3.99
Other Perv.	19.05	27.18	26.10
Total	**52.60 AC**	**79.96 AC**	**79.96 AC**

160617-4 №

RECEIVED
JUN 17 2016
WATER RESOURCE REGULATION

SCANNED 06/17/2016 15:39 AM

SCHNARS
ENGINEERING CORPORATION

Fields at Gulfstream Polo PUD
23-May-2016
Basin N2 Land Use Breakdown

Table 1 - Residential Lots

Residential Lots	# of lots	Building Footprint (SF per lot)	Building Footprint Total (Acres)	Patio / Other Impervious (SF per lot)	Patio / Other Impervious Total (Acres)	Driveway (SF per lot)	Driveway Total (Acres)
45' wide lots	0	2625	0.00	250	0.00	450	0.00
50' wide lots	0	3300	0.00	380	0.00	450	0.00
70' wide lots	0	4000	0.00	1000	0.00	565	0.00
20' townhomes	0	1120	0.00	260	0.00	450	0.00
24' townhomes	0	1320	0.00	300	0.00	450	0.00
28' townhomes	2	1540	0.07	340	0.02	450	0.02
Total	2		0.07		0.02		0.02

Table 2 -Land Use Summary

Land Use	Total Acres	Building Footprint (ac.)	Other Impervious (acres)	Pervious (acres)
Rec. Tract	1.38	0.15	0.50	0.73
Civic	0.00	0.00	0	0.00
Residential Lots	0.24	0.07	0.04	0.13
Lake	1.23	0	1.23	0
Lake Bank	0.82	0	0	0.82
Open Space	0.20	0.00	0.00	0.20
Polo Road	4.73	0	2.48	2.25
Road R/W	1.03	0	0.71	0.32
Buffers	0.7	0	0.11	0.59
Total	10.33	0.22	5.07	5.04

SCHNARS
ENGINEERING CORPORATION

SCANNED 06/17/2016 15:39 BM

Fields at Gulfstream Polo PUD
23-May-2016
Basin N3 Land Use Breakdown

Table 1 - Residential Lots

Residential Lots	# of lots	Building Footprint (SF per lot)	Building Footprint Total (Acres)	Patio / Other Impervious (SF per lot)	Patio / Other Impervious Total (Acres)	Driveway (SF per lot)	Driveway Total (Acres)
45' wide lots	49	2625	2.95	250	0.28	450	0.51
50' wide lots	37	3300	2.80	380	0.32	450	0.38
70' wide lots	1	4000	0.09	1000	0.02	565	0.01
20' townhomes	0	1120	0.00	260	0.00	450	0.00
24' townhomes	76	1320	2.30	300	0.52	450	0.79
28' townhomes	64	1540	2.26	340	0.50	450	0.66
Total	227		10.41		1.65		2.35

Table 2 -Land Use Summary

Land Use	Total Acres	Building Footprint (ac.)	Other Impervious (acres)	Pervious (acres)
Rec. Tract	0	0.00	0.00	0.00
Civic	0.00	0.00	0	0.00
Residential Lots	22.08	10.41	4.00	7.67
Lake	5.06	0	5.06	0
Lake Bank	1.83	0	0	1.83
Open Space	5.54	0	0.00	5.54
Polo Road	0	0	0.00	0.00
Road R/W	6.93	0	5.96	0.97
Future 80' R/W	2.65	0	0.86	1.79
Buffers	0.83	0	0.18	0.65
Total	44.92	10.41	16.06	18.45

SCHNARS
ENGINEERING CORPORATION

SCANNED 06/17/2016 15:39 BM

PROJECT NO. 14132
April 2016

PAVING, GRADING & DRAINAGE PLANS
FOR

Fields at Gulfstream Polo - Plat One

Palm Beach County, Florida

LEGAL DESCRIPTION

KNOW ALL MEN BY THESE PRESENTS THAT PULTE HOME CORPORATION, A MICHIGAN CORPORATION, OWNER OF THE LAND SHOWN HEREON AS FIELDS AT GULFSTREAM POLO - PLAT ONE, A PLANNED UNIT DEVELOPMENT, BEING A REPLAT OF A PORTION OF BLOCK 28, PALM BEACH FARMS COMPANY PLAT NO. 3, AS RECORDED IN PLAT BOOK 2, PAGES 45 THROUGH 54, OF THE PUBLIC RECORDS OF PALM BEACH COUNTY, FLORIDA, LYING IN SECTION 29, TOWNSHIP 44 SOUTH, RANGE 42 EAST, PALM BEACH COUNTY, FLORIDA, MORE PARTICULARLY DESCRIBED AS FOLLOWS:

ALL OF TRACTS 14, 19, 20, 29 AND 30, TOGETHER WITH A PORTION OF TRACTS 13, 31 AND 32, TOGETHER WITH ALL THAT PORTION OF THE 30 FOOT WIDE RIGHT-OF-WAY LYING BETWEEN SAID TRACTS 13, 14 AND 19, 20, ALL IN BLOCK 28, PALM BEACH FARMS CO. PLAT NO. 3, AS RECORDED IN PLAT BOOK 2, PAGE 45 THROUGH 54 OF THE PUBLIC RECORDS OF PALM BEACH COUNTY, FLORIDA, MORE PARTICULARLY DESCRIBED AS FOLLOWS

BEGINNING AT THE SOUTHWEST CORNER OF SAID TRACT 29: THENCE N.00 33/64 56'30"W. ALONG THE WEST LINE OF SAID TRACTS 13, 20 AND 29, A DISTANCE OF 1,960.00 FEET; THENCE N.89 33/64 03'30"E ALONG A LINE 50.00 FEET SOUTH OF (AS MEASURED AT RIGHT ANGLES TO) AND PARALLEL WITH THE NORTH LINE OF SAID TRACT 13, A DISTANCE OF 100.00 FEET; THENCE N.00 33/64 56'30"W. ALONG A LINE 100.00 FEET EAST OF (AS MEASURED AT RIGHT ANGLES TO) AND PARALLEL WITH THE WEST LINE OF SAID TRACT 13, A DISTANCE OF 50.00 FEET TO A POINT OF INTERSECTION WITH THE NORTH LINE OF SAID TRACT 13; THENCE N.89 33/64 03'30"E. ALONG THE NORTH LINE OF SAID TRACTS 13 AND 14, A DISTANCE OF 1,219.64 FEET TO THE NORTHEAST CORNER OF SAID TRACT 14; THENCE S.00 33/64 56'30"E. ALONG THE EAST LINE OF SAID TRACTS 14, 19 AND 30, A DISTANCE OF 1680.00 FEET; THENCE N.89 33/64 03'30"E. ALONG THE NORTH LINE OF THE SOUTH ONE-HALF OF SAID TRACTS 31 AND 32, A DISTANCE OF 952.25 FEET TO A POINT OF INTERSECTION WITH THE WEST RIGHT-OF-WAY LINE OF THE LAKE WORTH DRAINAGE DISTRICT E-2W CANAL, AS RECORDED IN OFFICIAL RECORD BOOK 24358, PAGE 1059 OF SAID PUBLIC RECORDS, AND THE POINT OF CURVATURE OF A NON TANGENT CURVE TO THE LEFT, OF WHICH THE RADIUS POINT LIES N.88 33/64 51'16"E., A RADIAL DISTANCE OF 11,602.25 FEET; THENCE SOUTHERLY ALONG THE ARC OF SAID RIGHT-OF-WAY LINE, THROUGH A CENTRAL ANGLE OF 01 33/64 37'48", A DISTANCE OF 330.05 FEET TO A POINT OF INTERSECTION WITH THE SOUTH LINE OF SAID TRACT 32; THENCE S.89 33/64 03'30"W. ALONG THE SOUTH LINE OF SAID TRACTS 29, 30, 31 AND 32, A DISTANCE OF 2,277.76 FEET TO THE POINT OF BEGINNING.

CONTAINING 2,962,429 SQUARE FEET/68.0080 ACRES, MORE OR LESS.

TOGETHER WITH:

ALL OF TRACTS 45 46, AND 47, TOGETHER WITH A PORTION OF TRACTS 33, 34, 35, 36 AND 48, ALL IN BLOCK 28, PALM BEACH FARMS CO. PLAT NO. 3, ACCORDING TO THE PLAT THEREOF, AS RECORDED IN PLAT BOOK 2, PAGE 45 THROUGH 54 OF THE PUBLIC RECORDS OF PALM BEACH COUNTY, FLORIDA, MORE PARTICULARLY DESCRIBED AS FOLLOWS

COMMENCING AT THE NORTHWEST CORNER OF SAID TRACT 36: THENCE S.00 33/64 56'30"E. ALONG THE WEST LINE THEREOF, A DISTANCE OF 43.56 FEET TO A POINT OF INTERSECTION WITH THE SOUTH RIGHT-OF-WAY LINE OF THE LAKE WORTH DRAINAGE DISTRICT L-13 CANAL, AS RECORDED IN OFFICIAL RECORD BOOK 6495, PAGE 761 OF SAID PUBLIC RECORDS, SAID RIGHT-OF-WAY LINE BEING 43.56 FEET SOUTH OF (AS MEASURED AT RIGHT ANGLES TO) AND PARALLEL WITH THE NORTH LINE OF SAID TRACT 36, AND THE POINT OF BEGINNING; THENCE N.89 33/64 03'30"E. ALONG SAID RIGHT-OF-WAY LINE, A DISTANCE OF 659.82 FEET TO A POINT OF INTERSECTION WITH THE EAST LINE OF SAID TRACT 36; THENCE S.00 33/64 56'30"E. ALONG THE EAST LINE OF SAID TRACT 36, AND THE SOUTH RIGHT-OF-WAY LINE OF SAID L-13 CANAL, A DISTANCE OF 2.64 FEET; THENCE N.89 33/64 03'30"E. ALONG THE SOUTH RIGHT-OF-WAY LINE OF SAID L-13 CANAL, SAID RIGHT-OF-WAY LINE BEING 46.20 FEET SOUTH OF (AS MEASURED AT RIGHT ANGLES TO) AND PARALLEL WITH THE NORTH LINE OF SAID TRACTS 33, 34 AND 35, A DISTANCE OF 1,620.63 FEET TO A POINT OF INTERSECTION WITH THE WEST RIGHT-OF-WAY LINE OF THE LAKE WORTH DRAINAGE DISTRICT E-2W CANAL, AS RECORDED IN OFFICIAL RECORD BOOK 24358, PAGE 1059 OF SAID PUBLIC RECORDS, AND THE POINT OF CURVE OF A NON TANGENT CURVE TO THE LEFT, OF WHICH THE RADIUS POINT LIES N.86 33/64 50'53"E., A RADIAL DISTANCE OF 11,602.25 FEET; THENCE SOUTHERLY ALONG THE ARC OF SAID RIGHT-OF-WAY LINE, THROUGH A CENTRAL ANGLE OF 00 33/64 40'12", A DISTANCE OF 135.66 FEET TO A POINT OF REVERSE CURVE TO THE RIGHT HAVING A RADIUS OF 7,495.75 FEET AND A CENTRAL ANGLE OF 02 33/64 48'44"; THENCE SOUTHERLY ALONG THE ARC OF SAID RIGHT-OF-WAY LINE, A DISTANCE OF 367.91 FEET; THENCE S.08 33/64 57'50"E. ALONG SAID RIGHT-OF-WAY LINE, A DISTANCE OF 111.68 FEET TO A POINT OF INTERSECTION WITH THE WEST RIGHT-OF-WAY LINE OF FLORIDA'S TURNPIKE, AS RECORDED IN ROAD PLAT BOOK 11, PAGES 54 THROUGH 59 OF SAID PUBLIC RECORDS; THENCE S.00 33/64 58'26"E., A DISTANCE OF 659.97 FEET TO A POINT OF INTERSECTION WITH THE SOUTH LINE OF SAID TRACT 48; THENCE S.89 33/64 03'30"W. ALONG THE SOUTH LINE OF SAID TRACTS 48, 47, 46 AND 45, A DISTANCE OF 2311.90 FEET TO THE SOUTHWEST CORNER OF SAID TRACT 45; THENCE N.00 33/64 56'30"W. ALONG THE WEST LINE OF SAID TRACTS 36 AND 45, A DISTANCE OF 1,276.47 FEET TO THE POINT OF BEGINNING.

CONTAINING 2,934,756 SQUARE FEET/67.3727 ACRES, MORE OR LESS.

SAID LANDS SITUATE IN PALM BEACH COUNTY, FLORIDA.
CONTAINING A TOTAL OF 5,897,185 SQUARE FEET/135.3807 ACRES MORE OR LESS.

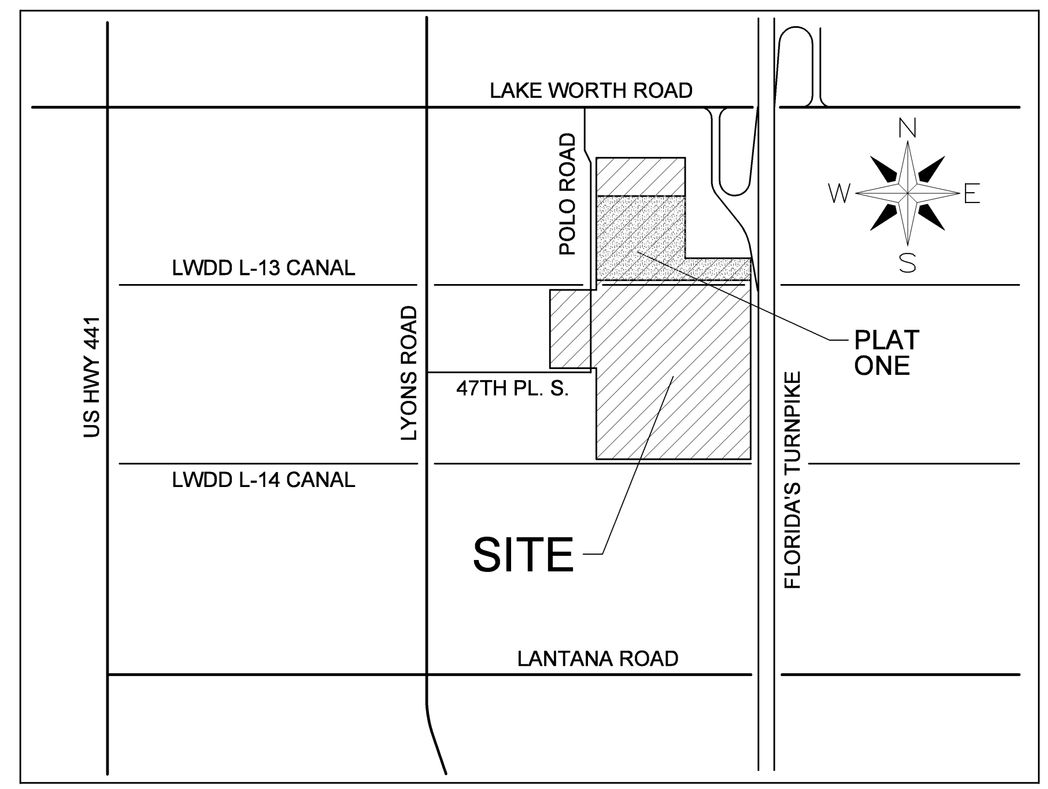

LOCATION MAP
SEC 29, TWP 44S, RGE 42E
NOT TO SCALE

INDEX OF SHEETS

SHEET DESCRIPTION	SHEET NO.
MASTER DRAINAGE PLAN	1
PAVING, GRADING & DRAINAGE PLANS	2 - 12
PAVEMENT MARKING & SIGNAGE PLANS	13 - 16
CONSTRUCTION DETAILS	17 - 21
CONSTRUCTION PERIOD STORMWATER POLLUTION PREVENTION PLAN	22
CONSTRUCTION PERIOD STORMWATER POLLUTION PREVENTION DETAILS	23

OWNER:
PULTE HOME CORPORATION
1400 INDIAN CREEK PARKWAY
JUPITER, FL 33458

811
Know what's below.
Call before you dig.

SCHNARS ENGINEERING CORPORATION
947 CLINT MOORE ROAD • BOCA RATON, FLORIDA 33487
TEL: (561) 241–6455 • FAX: (561) 241–5182
Certificate of Authorization No. 6640

SCHNARS
ENGINEERING CORPORATION

Jeffrey T. Schnars, P.E.
Civil Engineer
Florida Registration No. 46697
(FOR THE FIRM)

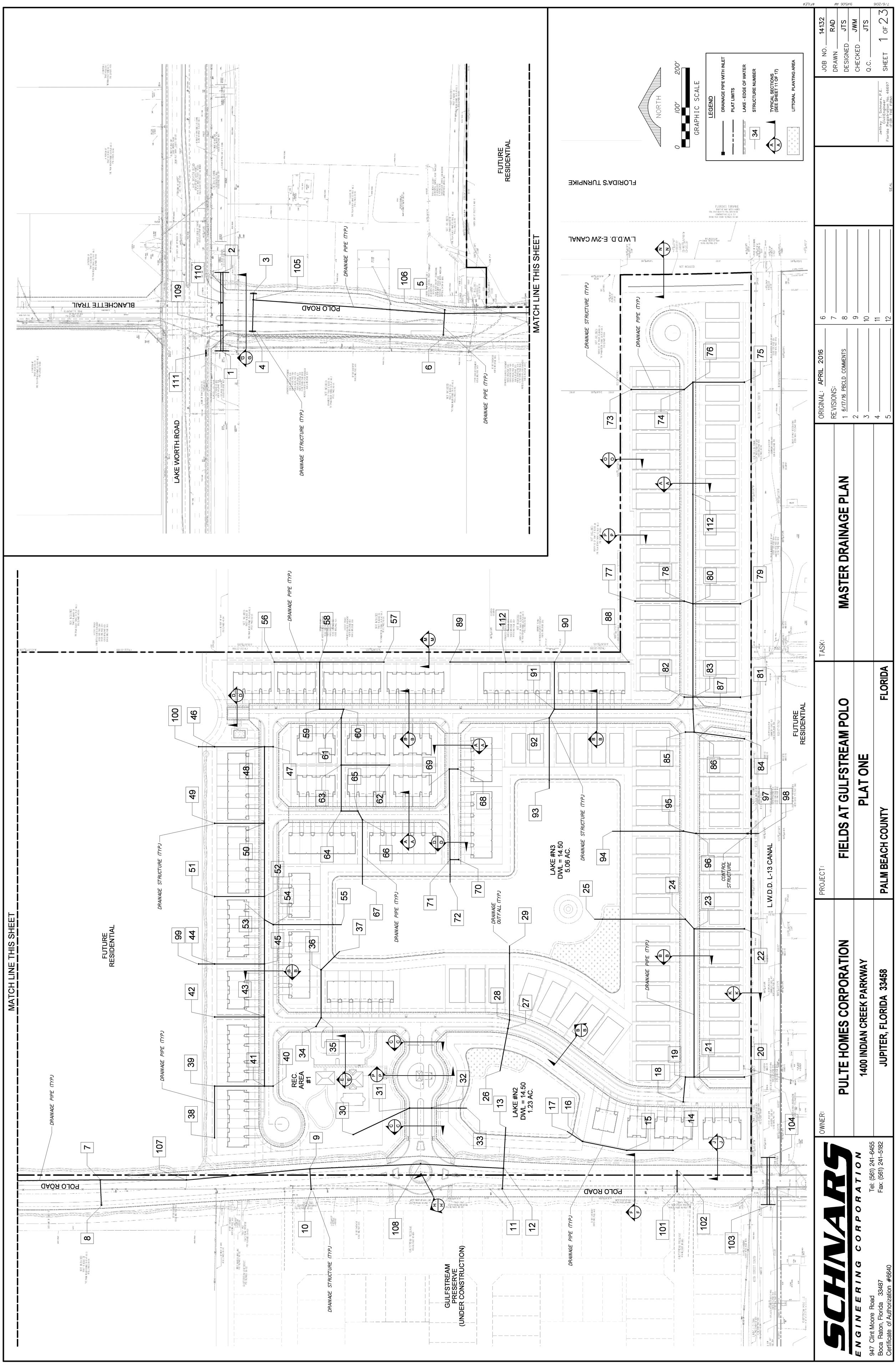
MATCH LINE THIS SHEET
FUTURE RESIDENTIAL
BLANCHETTE TRAIL
LAKE WORTH ROAD
POLO ROAD
DRAINAGE PIPE (TYP.)
DRAINAGE STRUCTURE (TYP.)
DRAINAGE OUTFALL (TYP.)
REC. AREA #1
LAKE #N3 DWL = 14.50 5.06 AC.
LAKE #N2 DWL = 14.50 1.23 AC.
CONTROL STRUCTURE
L.W.D.D. L-13 CANAL
GULFSTREAM PRESERVE (UNDER CONSTRUCTION)
FLORIDA'S TURNPIKE
L.W.D.D. E-2W CANAL
NORTH
GRAPHIC SCALE
LEGEND
DRAINAGE PIPE WITH INLET
PLAT LIMITS
LAKE - EDGE OF WATER
STRUCTURE NUMBER
TYPICAL SECTIONS (SEE SHEET 11 OF 17)
LITTORAL PLANTING AREA
JOB NO. 14132
DRAWN RAD
DESIGNED JTS
CHECKED JWM
Q.C. JTS
SHEET 1 OF 23
ORIGINAL: APRIL 2016
REVISIONS:
1 6/17/16 PBCLD COMMENTS
TASK:
MASTER DRAINAGE PLAN
PROJECT:
FIELDS AT GULFSTREAM POLO
PLAT ONE
PALM BEACH COUNTY
FLORIDA
OWNER:
PULTE HOMES CORPORATION
1400 INDIAN CREEK PARKWAY
JUPITER, FLORIDA 33458
SCHNARS
ENGINEERING CORPORATION
947 Clint Moore Road
Boca Raton, Florida 33487
Certificate of Authorization #6640
Tel: (561) 241-6455
Fax: (561) 241-5182
Jeffrey T. Schnars, P.E.
Civil Engineer
Florida Registration No. 46697
(FOR THE FIRM)
SEAL
7/6/2016 9:45:06 AM $FILE$

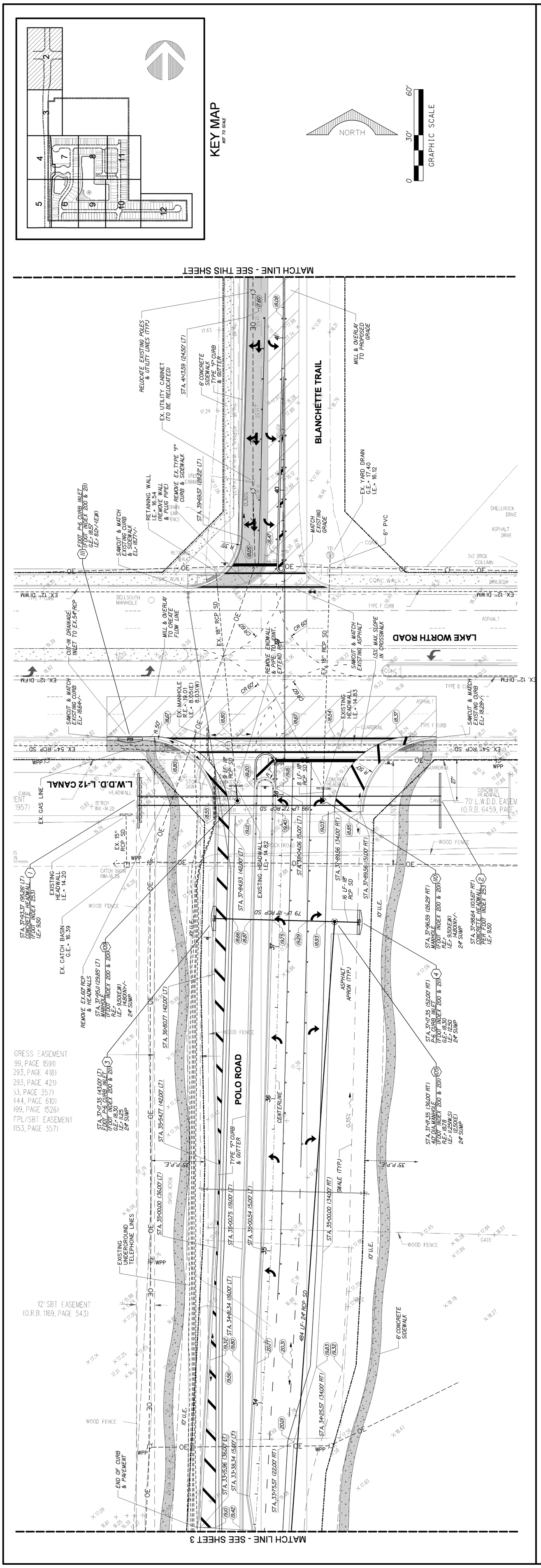

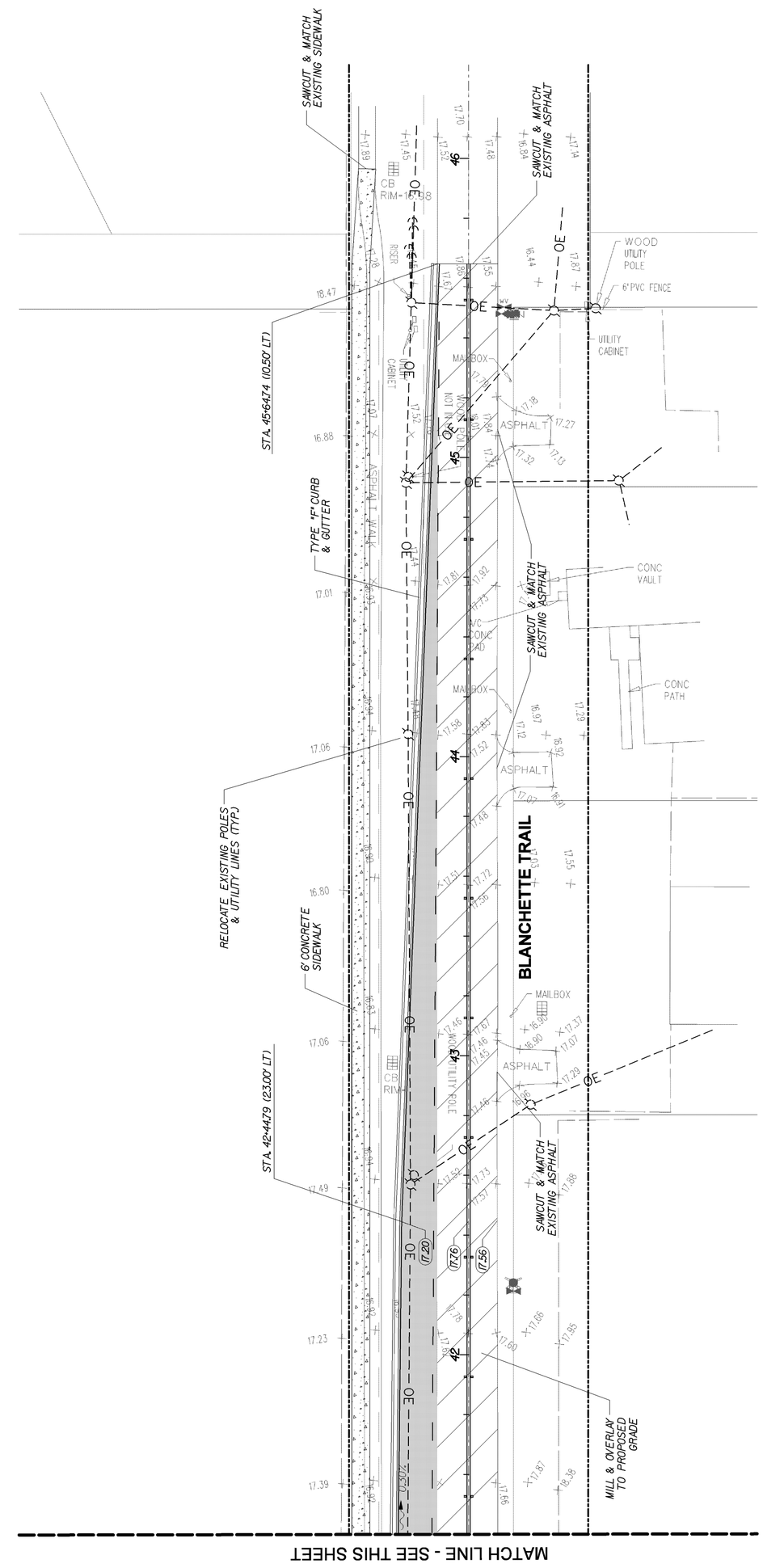

NOTES:

1. ALL ELEVATIONS SHOWN HEREON ARE BASED ON THE NORTH AMERICAN VERTICAL DATUM OF 1988 (NGVD 1988).
2. SEE PLAT BY CAULFIELD & WHEELER, INC. FOR SITE GEOMETRY.
3. THE GRATE ELEVATIONS (G.E.) ARE THE EDGE OF PAVEMENT ELEVATION.
4. PAVERS SHALL BE INSTALLED PER THE DETAIL ON SHEET 20 IN THE LOCATIONS DESIGNATED ON THE PLAN VIEW.
5. DAMAGES TO LOOPS OR ANY SIGNAL EQUIPMENT CAUSED BY CONSTRUCTION OF THIS PROJECT MUST BE REPAIRED OR REPLACED TO ORIGINAL OR BETTER CONDITION AT NO COST TO PALM BEACH COUNTY.
6. CONTRACTOR SHALL CONTACT PALM BEACH COUNTY TRAFFIC OPERATIONS AT 561-233-3900 FORTY-EIGHT (48) HOURS PRIOR TO CONSTRUCTION IF WORK IS BEING DONE WITHIN 10 FEET OF ANY SIGNAL EQUIPMENT.
7. ALL CONSTRUCTION AND RESTORATION WORK WITHIN PALM BEACH COUNTY RIGHT OF WAY SHALL COMPLY WITH THE LATEST EDITION OF THE FDOT STANDARD INDEX AND THE FDOT STANDARD SPECIFICATIONS FOR ROAD AND BRIDGE CONSTRUCTION.
8. ALL HANDICAP RAMPS SHALL BE INSTALLED PER FDOT INDEX 304.

PAVING AND DRAINAGE LEGEND

B.E.	BUFFER EASEMENT
R.E.	RIM ELEVATION
G.E.	GRATE ELEVATION
I.E.	INVERT ELEVATION
	DIRECTION OF OVERLAND FLOW
P.R.B.	POLLUTION RETARDANT BASIN
F.F.=8.40	FINISHED FLOOR ELEVATION
CATCH BASIN G.E.= I.E.=	STRUCTURE DESIGNATION
100 LF / 15"	LENGTH, SIZE OF STORM DRAIN
×18.7'	EXISTING ELEVATION
(15.30)	PROPOSED GRADE
	C-900 PVC
	DUCTILE IRON PIPE
	PLAT LIMITS
	EXISTING OR PROPOSED BY OTHERS INFORMATION
8" PVC WM	EXISTING UTILITIES
	EXISTING UTILITIES TO BE REMOVED
	PROPOSED INFORMATION
	PROPOSED CONCRETE SIDEWALK
	SIDEWALK - REQUIRED IMPROVEMENTS
	LAKE - EDGE OF WATER
	LITTORAL PLANTING AREA
	PROPOSED PAVERS
	PROPOSED OFFSITE ASPHALT

JOB NO. 14132
DRAWN RAD
DESIGNED JTS
CHECKED JWM
Q.C. JTS
SHEET 2 OF 23

Jeffrey T. Schnars, P.E.
Civil Engineer
Registration No. 46697
Florida Registration No. 4669
(FOR THE FIRM)

SEAL

ORIGINAL: APRIL 2016

REVISIONS:
1 6/17/16 PBCLD COMMENTS
2
3
4
5
6
7
8
9
10
11
12

TASK: PAVING, GRADING & DRAINAGE PLAN

PROJECT: FIELDS AT GULFSTREAM POLO
PLAT ONE
PALM BEACH COUNTY FLORIDA

OWNER: PULTE HOMES CORPORATION
1400 INDIAN CREEK PARKWAY
JUPITER, FLORIDA 33458

SCHNARS
ENGINEERING CORPORATION
947 Clint Moore Road
Boca Raton, Florida 33487
Certificate of Authorization #6640
Tel: (561) 241-6455
Fax: (561) 241-5182

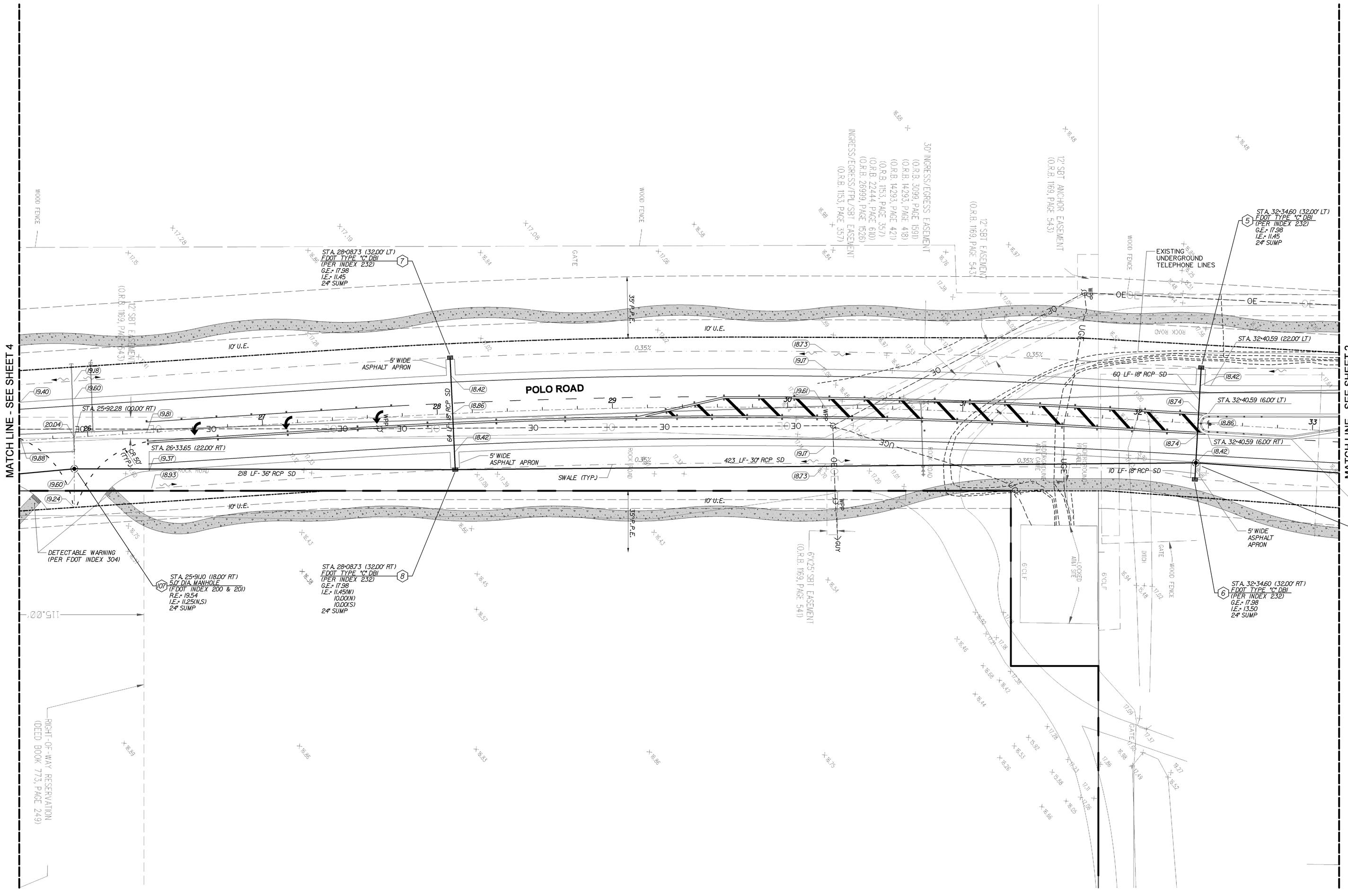

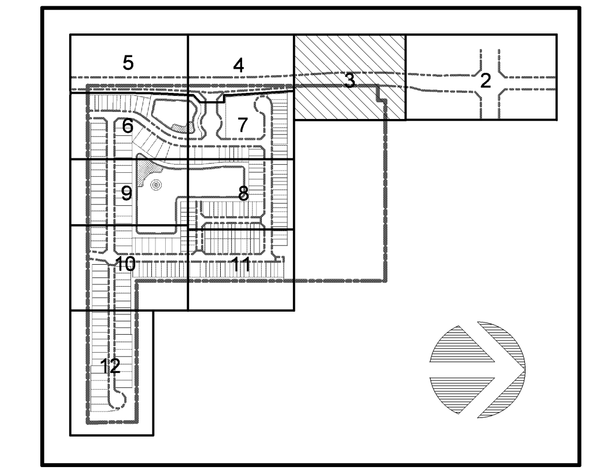

KEY MAP
NOT TO SCALE

NORTH

0 30' 60'
GRAPHIC SCALE

PAVING AND DRAINAGE LEGEND

B.E.	BUFFER EASEMENT
R.E.	RIM ELEVATION
G.E.	GRATE ELEVATION
I.E.	INVERT ELEVATION
	DIRECTION OF OVERLAND FLOW
P.R.B.	POLLUTION RETARDANT BASIN
F.F.=18.40	FINISHED FLOOR ELEVATION
CATCH BASIN G.E.= I.E.=	STRUCTURE DESIGNATION
100 LF / 15"	LENGTH, SIZE OF STORM DRAIN
×18.7'	EXISTING ELEVATION
(5.30)	PROPOSED GRADE
	C-900 PVC
	DUCTILE IRON PIPE
	PLAT LIMITS
	EXISTING OR PROPOSED BY OTHERS INFORMATION
8" PVC WM	EXISTING UTILITIES
	EXISTING UTILITIES TO BE REMOVED
	PROPOSED INFORMATION
	PROPOSED CONCRETE SIDEWALK
	SIDEWALK - REQUIRED IMPROVEMENTS
	LAKE - EDGE OF WATER
	LITTORAL PLANTING AREA
	PROPOSED PAVERS
	PROPOSED OFFSITE ASPHALT

NOTES:

1. ALL ELEVATIONS SHOWN HEREON ARE BASED ON THE NORTH AMERICAN VERTICAL DATUM OF 1988 (NGVD 1988).
2. SEE PLAT BY CAULFIELD & WHEELER, INC. FOR SITE GEOMETRY.
3. THE GRATE ELEVATIONS (G.E.) ARE THE EDGE OF PAVEMENT ELEVATION.
4. PAVERS SHALL BE INSTALLED PER THE DETAIL ON SHEET 20 IN THE LOCATIONS DESIGNATED ON THE PLAN VIEW.
5. DAMAGES TO LOOPS OR ANY SIGNAL EQUIPMENT CAUSED BY CONSTRUCTION OF THIS PROJECT MUST BE REPAIRED OR REPLACED TO ORIGINAL OR BETTER CONDITION AT NO COST TO PALM BEACH COUNTY.
6. CONTRACTOR SHALL CONTACT PALM BEACH COUNTY TRAFFIC OPERATIONS AT 561-233-3900 FORTY-EIGHT (48) HOURS PRIOR TO CONSTRUCTION IF WORK IS BEING DONE WITHIN 10 FEET OF ANY SIGNAL EQUIPMENT.
7. ALL CONSTRUCTION AND RESTORATION WORK WITHIN PALM BEACH COUNTY RIGHT OF WAY SHALL COMPLY WITH THE LATEST EDITION OF THE FDOT STANDARD INDEX AND THE FDOT STANDARD SPECIFICATIONS FOR ROAD AND BRIDGE CONSTRUCTION.
8. ALL HANDICAP RAMPS SHALL BE INSTALLED PER FDOT INDEX 304.

SCHNARS
ENGINEERING CORPORATION
947 Clint Moore Road
Boca Raton, Florida 33487
Certificate of Authorization #6640
Tel: (561) 241-6455
Fax: (561) 241-5182

OWNER: PULTE HOMES CORPORATION
1400 INDIAN CREEK PARKWAY
JUPITER, FLORIDA 33458

PROJECT: FIELDS AT GULFSTREAM POLO
PLAT ONE
PALM BEACH COUNTY FLORIDA

TASK: PAVING, GRADING & DRAINAGE PLAN

ORIGINAL: APRIL 2016
REVISIONS:
1 6/17/16 PBCLD COMMENTS
2
3
4
5
6
7
8
9
10
11
12

SEAL

Jeffrey T. Schnars, P.E.
Civil Engineer
Florida Registration No. 46697
(FOR THE FIRM)

JOB NO. 14132
DRAWN RAD
DESIGNED JTS
CHECKED JWM
Q.C. JTS
SHEET 3 OF 23

S:\DWG\ PW
6/17/2016

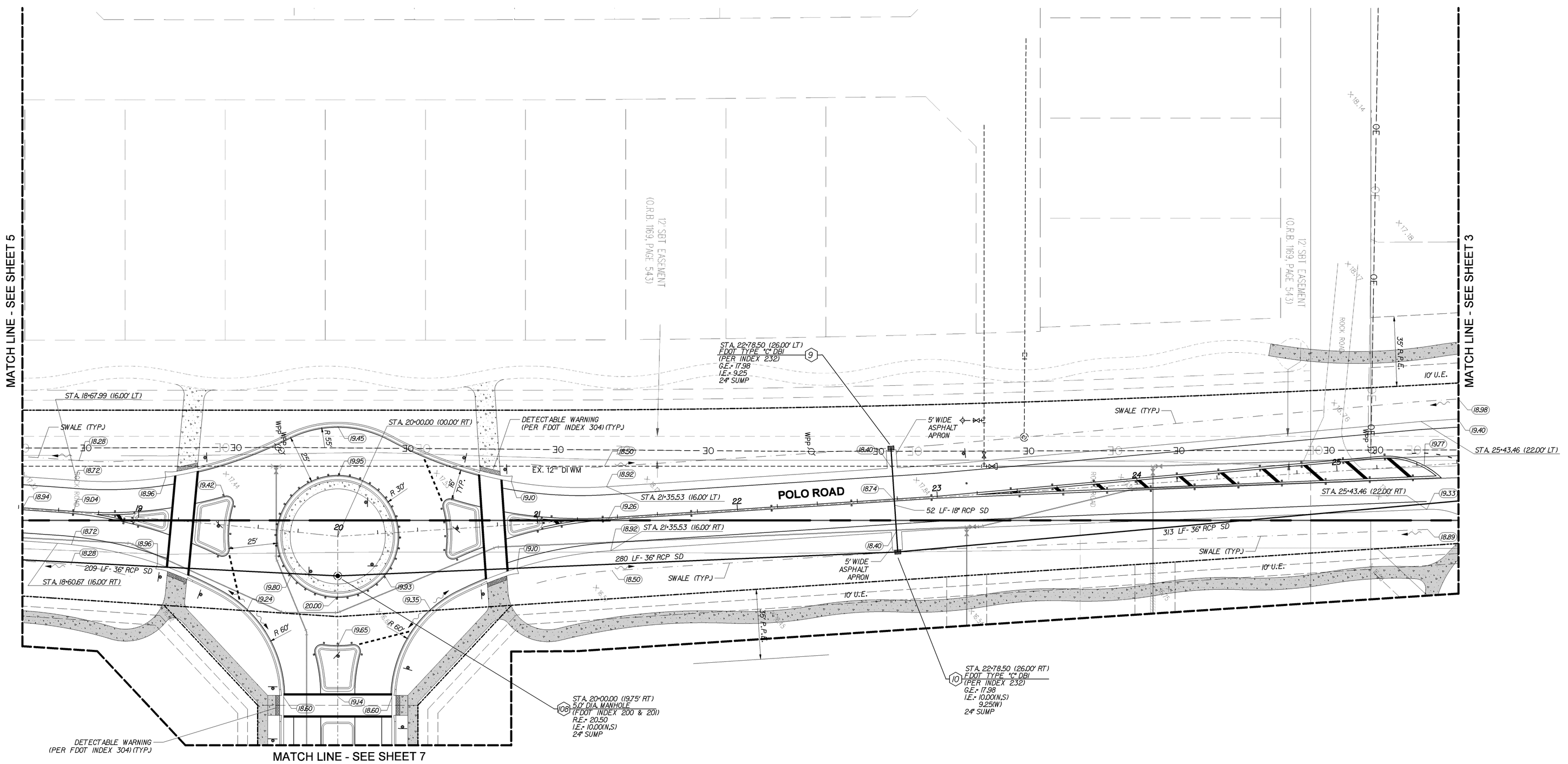

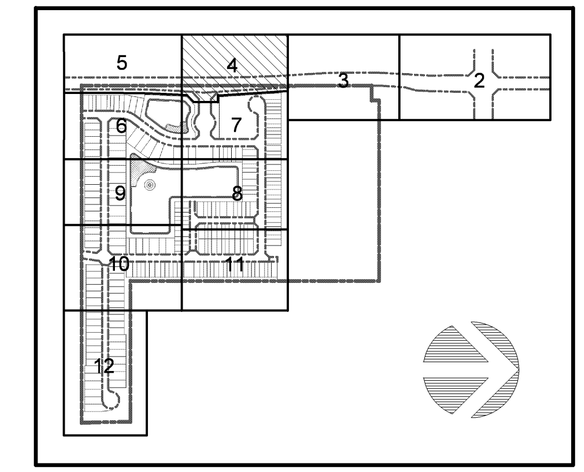

KEY MAP
NOT TO SCALE

NORTH

0 30' 60'
GRAPHIC SCALE

PAVING AND DRAINAGE LEGEND

B.E.	BUFFER EASEMENT
R.E.	RIM ELEVATION
G.E.	GRATE ELEVATION
I.E.	INVERT ELEVATION
	DIRECTION OF OVERLAND FLOW
P.R.B.	POLLUTION RETARDANT BASIN
F.F.=21.40	FINISHED FLOOR ELEVATION
CATCH BASIN G.E.= I.E.=	STRUCTURE DESIGNATION
100 LF./ 15"	LENGTH, SIZE OF STORM DRAIN
×18.7'	EXISTING ELEVATION
15.30	PROPOSED GRADE
	C-900 PVC
	DUCTILE IRON PIPE
	PLAT LIMITS
	EXISTING OR PROPOSED BY OTHERS INFORMATION
8" PVC WM	EXISTING UTILITIES
	EXISTING UTILITIES TO BE REMOVED
	PROPOSED INFORMATION
	PROPOSED CONCRETE SIDEWALK
	SIDEWALK - REQUIRED IMPROVEMENTS
	LAKE - EDGE OF WATER
	LITTORAL PLANTING AREA
	PROPOSED PAVERS
	PROPOSED OFFSITE ASPHALT

NOTES:

1. ALL ELEVATIONS SHOWN HEREON ARE BASED ON THE NORTH AMERICAN VERTICAL DATUM OF 1988 (NGVD 1988).
2. SEE PLAT BY CAULFIELD & WHEELER, INC. FOR SITE GEOMETRY.
3. THE GRATE ELEVATIONS (G.E.) ARE THE EDGE OF PAVEMENT ELEVATION.
4. PAVERS SHALL BE INSTALLED PER THE DETAIL ON SHEET 20 IN THE LOCATIONS DESIGNATED ON THE PLAN VIEW.
5. DAMAGES TO LOOPS OR ANY SIGNAL EQUIPMENT CAUSED BY CONSTRUCTION OF THIS PROJECT MUST BE REPAIRED OR REPLACED TO ORIGINAL OR BETTER CONDITION AT NO COST TO PALM BEACH COUNTY.
6. CONTRACTOR SHALL CONTACT PALM BEACH COUNTY TRAFFIC OPERATIONS AT 561-233-3900 FORTY-EIGHT (48) HOURS PRIOR TO CONSTRUCTION IF WORK IS BEING DONE WITHIN 10 FEET OF ANY SIGNAL EQUIPMENT.
7. ALL CONSTRUCTION AND RESTORATION WORK WITHIN PALM BEACH COUNTY RIGHT OF WAY SHALL COMPLY WITH THE LATEST EDITION OF THE FDOT STANDARD INDEX AND THE FDOT STANDARD SPECIFICATIONS FOR ROAD AND BRIDGE CONSTRUCTION.
8. ALL HANDICAP RAMPS SHALL BE INSTALLED PER FDOT INDEX 304.

SCHNARS
ENGINEERING CORPORATION
947 Clint Moore Road
Boca Raton, Florida 33487
Certificate of Authorization #6640
Tel: (561) 241-6455
Fax: (561) 241-5182

OWNER: PULTE HOMES CORPORATION
1400 INDIAN CREEK PARKWAY
JUPITER, FLORIDA 33458

PROJECT: FIELDS AT GULFSTREAM POLO
PLAT ONE
PALM BEACH COUNTY FLORIDA

TASK: PAVING, GRADING & DRAINAGE PLAN

ORIGINAL: APRIL 2016
REVISIONS:
1 6/17/16 PBCLD COMMENTS
2
3
4
5
6
7
8
9
10
11
12

SEAL

Jeffrey T. Schnars, P.E.
Civil Engineer
Florida Registration No. 46697
(FOR THE FIRM)

JOB NO. 14132
DRAWN RAD
DESIGNED JTS
CHECKED JWM
Q.C. JTS
SHEET 4 OF 23

FILE
SCALE AS
6/20/2016

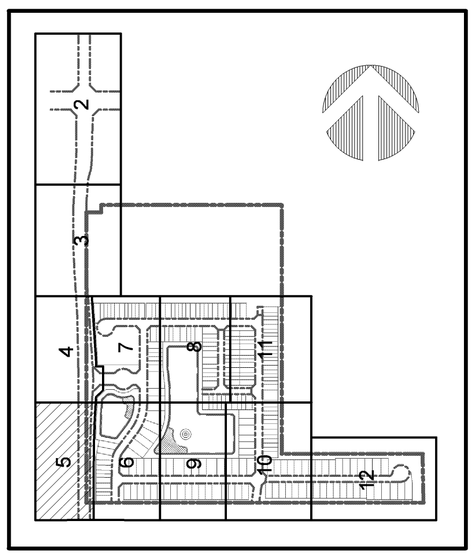

PAVING AND DRAINAGE LEGEND

- B.E. — BUFFER EASEMENT
- R.E. — RIM ELEVATION
- G.E. — GRATE ELEVATION
- I.E. — INVERT ELEVATION
- DIRECTION OF OVERLAND FLOW
- P.R.B. — POLLUTION RETARDANT BASIN
- FF=21.40 — FINISHED FLOOR ELEVATION
- CATCH BASIN G.E.= I.E.= — STRUCTURE DESIGNATION
- 100 LF - 15" — LENGTH, SIZE OF STORM DRAIN
- ×18.7' — EXISTING ELEVATION
- (15.30) — PROPOSED GRADE
- C-900 PVC
- DUCTILE IRON PIPE
- PLAT LIMITS
- EXISTING OR PROPOSED BY OTHERS INFORMATION
- 8" PVC WM — EXISTING UTILITIES
- 8" PVC WM — EXISTING UTILITIES TO BE REMOVED
- PROPOSED INFORMATION
- PROPOSED CONCRETE SIDEWALK
- SIDEWALK - REQUIRED IMPROVEMENTS
- LAKE - EDGE OF WATER
- LITTORAL PLANTING AREA
- PROPOSED PAVERS
- PROPOSED OFFSITE ASPHALT

NOTES:

1. ALL ELEVATIONS SHOWN HEREON ARE BASED ON THE NORTH AMERICAN VERTICAL DATUM OF 1988 (NGVD 1988).
2. SEE PLAT BY CAULFIELD & WHEELER, INC. FOR SITE GEOMETRY.
3. THE GRATE ELEVATIONS (G.E.) ARE THE EDGE OF PAVEMENT ELEVATION.
4. PAVERS SHALL BE INSTALLED PER THE DETAIL ON SHEET 20 IN THE LOCATIONS DESIGNATED ON THE PLAN VIEW.
5. DAMAGES TO LOOPS OR ANY SIGNAL EQUIPMENT CAUSED BY CONSTRUCTION OF THIS PROJECT MUST BE REPAIRED OR REPLACED TO ORIGINAL OR BETTER CONDITION AT NO COST TO PALM BEACH COUNTY.
6. CONTRACTOR SHALL CONTACT PALM BEACH COUNTY TRAFFIC OPERATIONS AT 561-233-3900 FORTY-EIGHT (48) HOURS PRIOR TO CONSTRUCTION IF WORK IS BEING DONE WITHIN 10 FEET OF ANY SIGNAL EQUIPMENT.
7. ALL CONSTRUCTION AND RESTORATION WORK WITHIN PALM BEACH COUNTY RIGHT OF WAY SHALL COMPLY WITH THE LATEST EDITION OF THE FDOT STANDARD INDEX AND THE FDOT STANDARD SPECIFICATIONS FOR ROAD AND BRIDGE CONSTRUCTION.
8. ALL HANDICAP RAMPS SHALL BE INSTALLED PER FDOT INDEX 304.

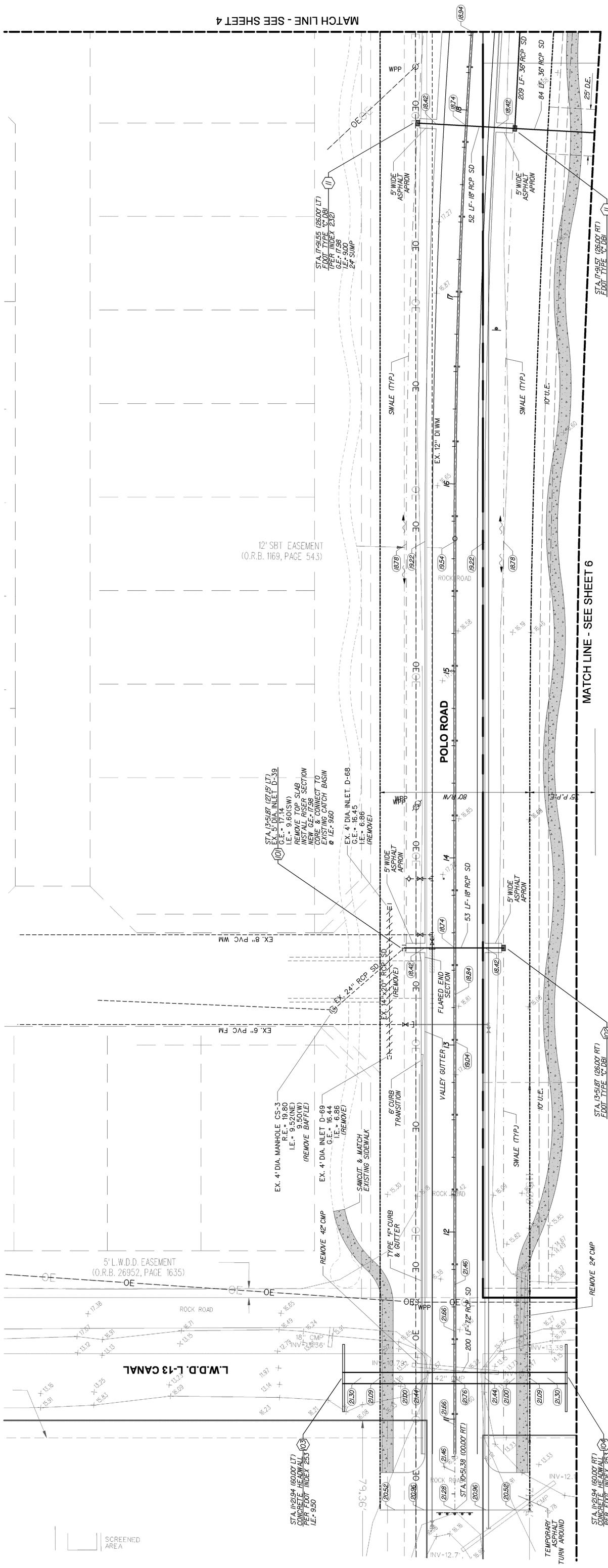

JOB NO.	14132
DRAWN	RAD
DESIGNED	JTS
CHECKED	JWM
Q.C.	JTS
SHEET	5 OF 23

Jeffrey T. Schnars, P.E.
Civil Engineer
Registration No. 46697
Florida Reg. Cert. No. 6640 (FDOT PE FIRM)

SEAL

ORIGINAL: APRIL 2016

REVISIONS:
1 5/2/16 REV. D.E. WIDTHS
2 6/17/16 PBCLD COMMENTS
3
4
5
6
7
8
9
10
11
12

TASK: PAVING, GRADING & DRAINAGE PLAN

PROJECT: FIELDS AT GULFSTREAM POLO
PLAT ONE
PALM BEACH COUNTY FLORIDA

OWNER: PULTE HOMES CORPORATION
1400 INDIAN CREEK PARKWAY
JUPITER, FLORIDA 33458

SCHNARS ENGINEERING CORPORATION
947 Clint Moore Road
Boca Raton, Florida 33487
Certificate of Authorization #6640
Tel: (561) 241-6455
Fax: (561) 241-5182

$FILE$ 9:06:07 AM 6/20/2016

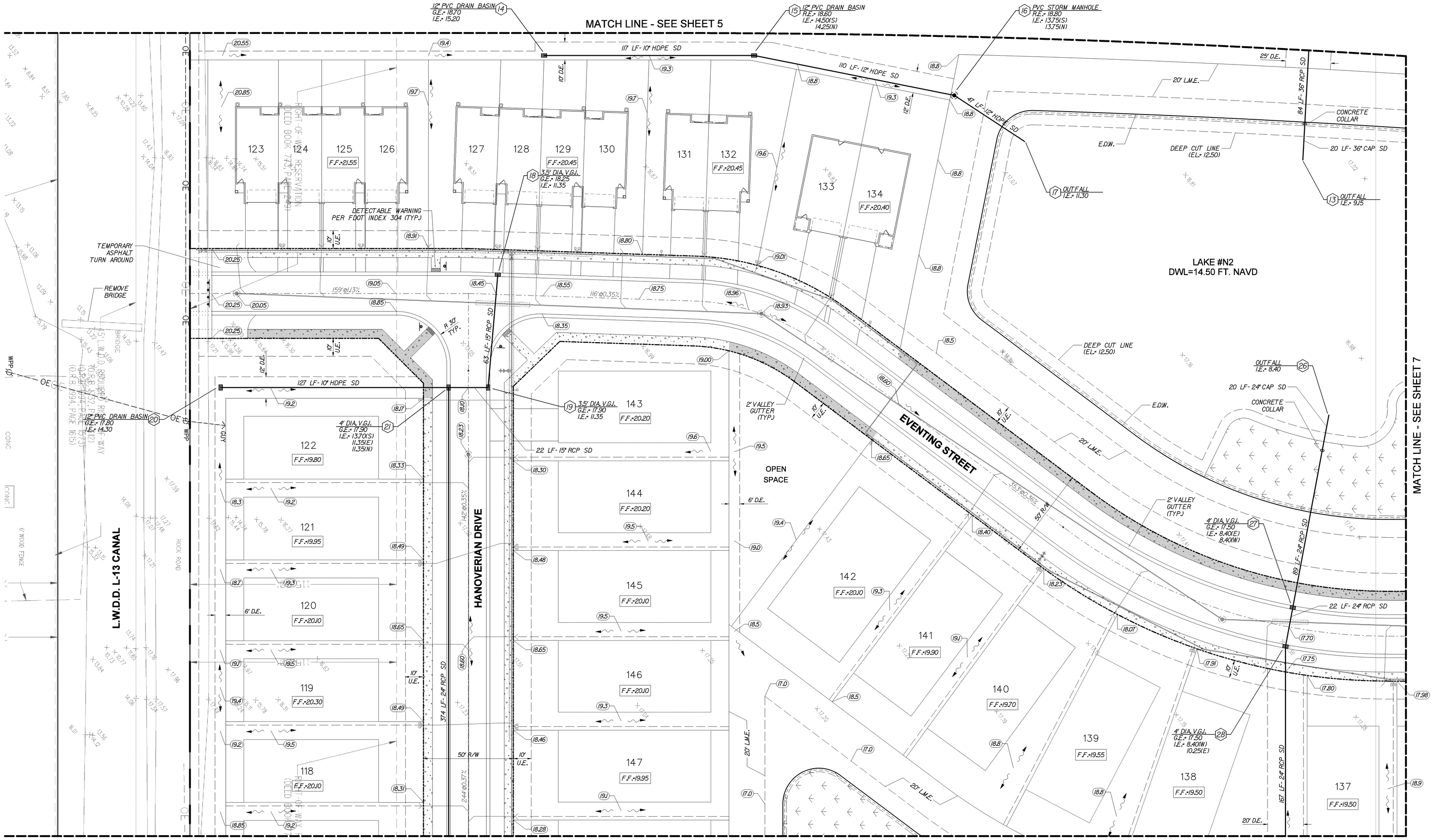

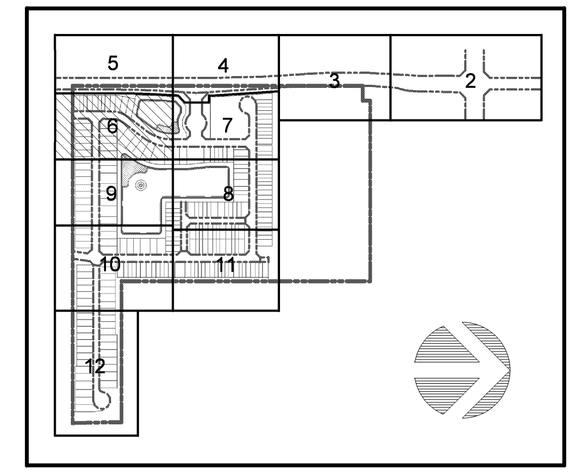

KEY MAP
NOT TO SCALE

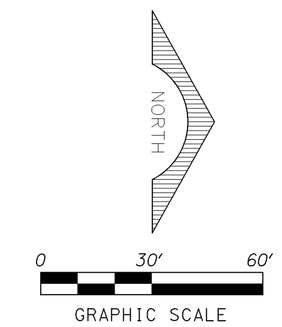

PAVING AND DRAINAGE LEGEND

B.E.	BUFFER EASEMENT
R.E.	RIM ELEVATION
G.E.	GRATE ELEVATION
I.E.	INVERT ELEVATION
	DIRECTION OF OVERLAND FLOW
P.R.B.	POLLUTION RETARDANT BASIN
F.F.=20.40	FINISHED FLOOR ELEVATION
CATCH BASIN G.E.= I.E.=	STRUCTURE DESIGNATION
100 LF/ 15"	LENGTH, SIZE OF STORM DRAIN
×18.7'	EXISTING ELEVATION
(15.30)	PROPOSED GRADE
	C-900 PVC
	DUCTILE IRON PIPE
	PLAT LIMITS
	EXISTING OR PROPOSED BY OTHERS INFORMATION
8" PVC WM	EXISTING UTILITIES
	EXISTING UTILITIES TO BE REMOVED
	PROPOSED INFORMATION
	PROPOSED CONCRETE SIDEWALK
	SIDEWALK - REQUIRED IMPROVEMENTS
	LAKE - EDGE OF WATER
	LITTORAL PLANTING AREA
	PROPOSED PAVERS
	PROPOSED OFFSITE ASPHALT

NOTES:

1. ALL ELEVATIONS SHOWN HEREON ARE BASED ON THE NORTH AMERICAN VERTICAL DATUM OF 1988 (NGVD 1988).
2. SEE PLAT BY CAULFIELD & WHEELER, INC. FOR SITE GEOMETRY.
3. THE GRATE ELEVATIONS (G.E.) ARE THE EDGE OF PAVEMENT ELEVATION.
4. PAVERS SHALL BE INSTALLED PER THE DETAIL ON SHEET 20 IN THE LOCATIONS DESIGNATED ON THE PLAN VIEW.
5. DAMAGES TO LOOPS OR ANY SIGNAL EQUIPMENT CAUSED BY CONSTRUCTION OF THIS PROJECT MUST BE REPAIRED OR REPLACED TO ORIGINAL OR BETTER CONDITION AT NO COST TO PALM BEACH COUNTY.
6. CONTRACTOR SHALL CONTACT PALM BEACH COUNTY TRAFFIC OPERATIONS AT 561-233-3900 FORTY-EIGHT (48) HOURS PRIOR TO CONSTRUCTION IF WORK IS BEING DONE WITHIN 10 FEET OF ANY SIGNAL EQUIPMENT.
7. ALL CONSTRUCTION AND RESTORATION WORK WITHIN PALM BEACH COUNTY RIGHT OF WAY SHALL COMPLY WITH THE LATEST EDITION OF THE FDOT STANDARD INDEX AND THE FDOT STANDARD SPECIFICATIONS FOR ROAD AND BRIDGE CONSTRUCTION.
8. ALL HANDICAP RAMPS SHALL BE INSTALLED PER FDOT INDEX 304.

SCHNARS
ENGINEERING CORPORATION
947 Clint Moore Road
Boca Raton, Florida 33487
Certificate of Authorization #6640
Tel: (561) 241-6455
Fax: (561) 241-5182

OWNER: PULTE HOMES CORPORATION
1400 INDIAN CREEK PARKWAY
JUPITER, FLORIDA 33458

PROJECT: FIELDS AT GULFSTREAM POLO
PLAT ONE
PALM BEACH COUNTY FLORIDA

TASK: PAVING, GRADING & DRAINAGE PLAN

ORIGINAL: APRIL 2016
REVISIONS:
1 5/2/16 REV. D.E. WIDTHS
2 6/17/16 PBCLD COMMENTS
3
4
5
6
7
8
9
10
11
12

SEAL

Jeffrey T. Schnars, P.E.
Civil Engineer
Florida Registration No. 46697
FOR THE FIRM

JOB NO. 14132
DRAWN RAD
DESIGNED JTS
CHECKED JWM
Q.C. JTS
SHEET 6 OF 23

6/17/2016
3300 PM
#14.E.8

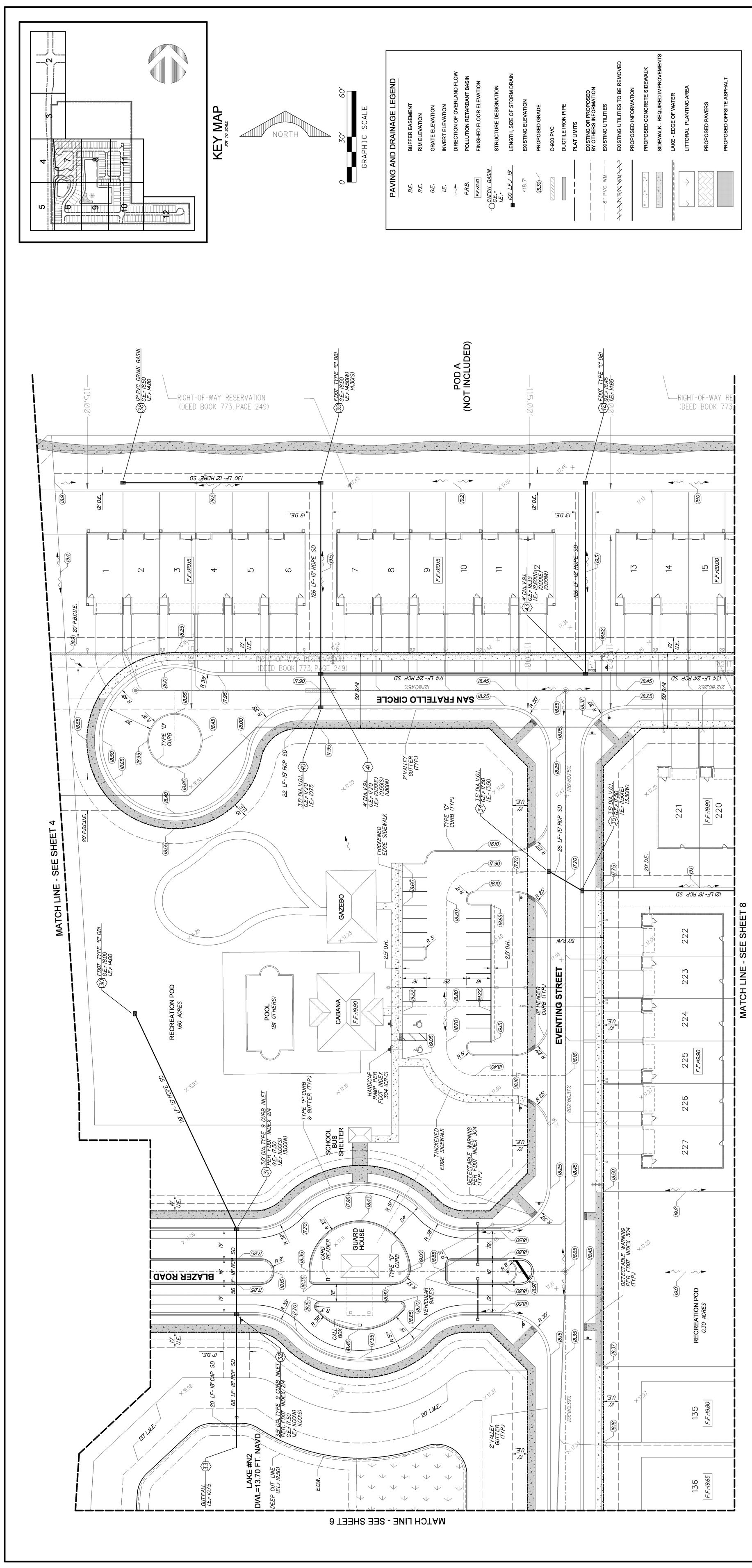

NOTES:

1. ALL ELEVATIONS SHOWN HEREON ARE BASED ON THE NORTH AMERICAN VERTICAL DATUM OF 1988 (NGVD 1988).
2. SEE PLAT BY CAULFIELD & WHEELER, INC. FOR SITE GEOMETRY.
3. THE GRATE ELEVATIONS (G.E.) ARE THE EDGE OF PAVEMENT ELEVATION.
4. PAVERS SHALL BE INSTALLED PER THE DETAIL ON SHEET 20 IN THE LOCATIONS DESIGNATED ON THE PLAN VIEW.
5. DAMAGES TO LOOPS OR ANY SIGNAL EQUIPMENT CAUSED BY CONSTRUCTION OF THIS PROJECT MUST BE REPAIRED OR REPLACED TO ORIGINAL OR BETTER CONDITION AT NO COST TO PALM BEACH COUNTY.
6. CONTRACTOR SHALL CONTACT PALM BEACH COUNTY TRAFFIC OPERATIONS AT 561-233-3900 FORTY-EIGHT (48) HOURS PRIOR TO CONSTRUCTION IF WORK IS BEING DONE WITHIN 10 FEET OF ANY SIGNAL EQUIPMENT.
7. ALL CONSTRUCTION AND RESTORATION WORK WITHIN PALM BEACH COUNTY RIGHT OF WAY SHALL COMPLY WITH THE LATEST EDITION OF THE FDOT STANDARD INDEX AND THE FDOT STANDARD SPECIFICATIONS FOR ROAD AND BRIDGE CONSTRUCTION.
8. ALL HANDICAP RAMPS SHALL BE INSTALLED PER FDOT INDEX 304.

6/17/2016 5:52pm PM $FILE$

JOB NO. 14132
DRAWN RAD
DESIGNED JTS
CHECKED JWM
Q.C. JTS
SHEET 7 OF 23

Jeffrey T. Schnars, P.E.
Civil Engineer
Florida Registration No. 46697
(FOR THE FIRM)

SEAL

ORIGINAL: APRIL 2016	
REVISIONS:	
1 5/2/16 REV. D.E. WIDTHS	6
2 6/17/16 PBCLD COMMENTS	7
3	8
4	9
5	10
	11
	12

TASK: PAVING, GRADING & DRAINAGE PLAN

PROJECT: FIELDS AT GULFSTREAM POLO
PLAT ONE
PALM BEACH COUNTY
FLORIDA

OWNER: PULTE HOMES CORPORATION
1400 INDIAN CREEK PARKWAY
JUPITER, FLORIDA 33458

SCHNARS
ENGINEERING CORPORATION
947 Clint Moore Road
Boca Raton, Florida 33487
Certificate of Authorization #6640
Tel: (561) 241-6455
Fax: (561) 241-5182

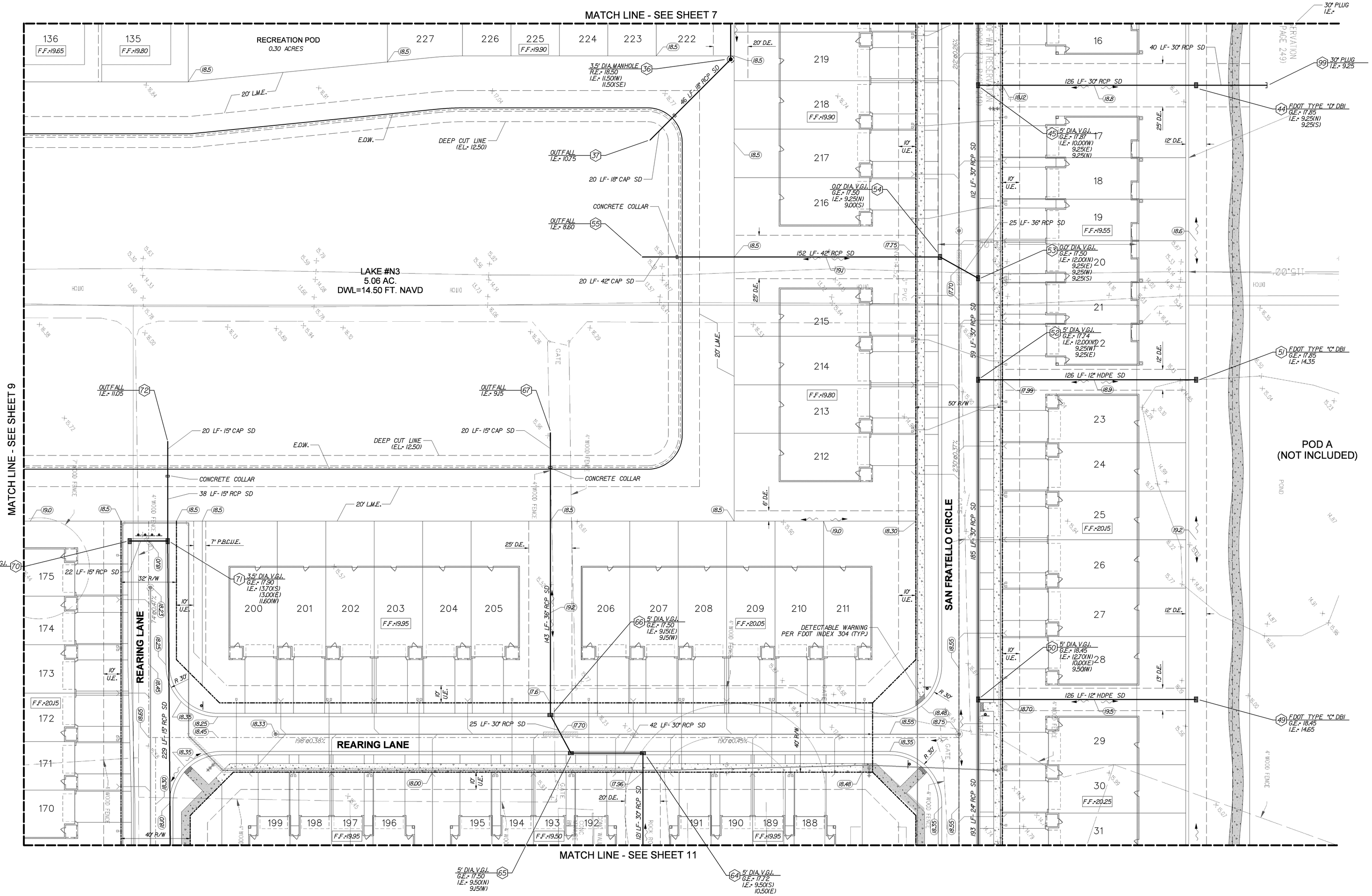

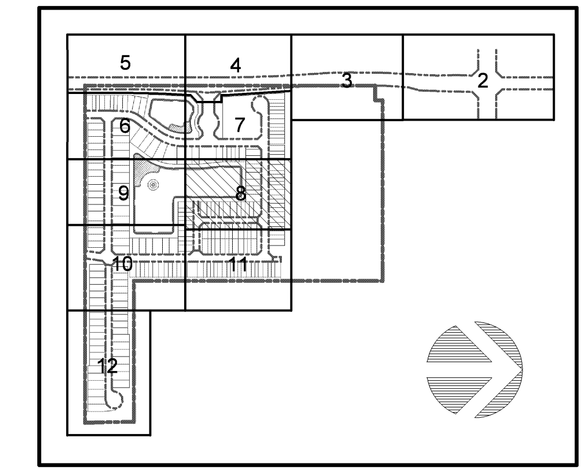

KEY MAP
NOT TO SCALE

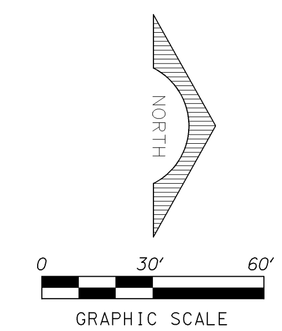

PAVING AND DRAINAGE LEGEND

B.E.	BUFFER EASEMENT
R.E.	RIM ELEVATION
G.E.	GRATE ELEVATION
I.E.	INVERT ELEVATION
	DIRECTION OF OVERLAND FLOW
P.R.B.	POLLUTION RETARDANT BASIN
F.F.=20.40	FINISHED FLOOR ELEVATION
CATCH BASIN G.E.= I.E.=	STRUCTURE DESIGNATION
100 LF./ 15"	LENGTH, SIZE OF STORM DRAIN
×18.7'	EXISTING ELEVATION
(5.30)	PROPOSED GRADE
	C-900 PVC
	DUCTILE IRON PIPE
	PLAT LIMITS
	EXISTING OR PROPOSED BY OTHERS INFORMATION
8" PVC WM	EXISTING UTILITIES
	EXISTING UTILITIES TO BE REMOVED
	PROPOSED INFORMATION
	PROPOSED CONCRETE SIDEWALK
	SIDEWALK - REQUIRED IMPROVEMENTS
	LAKE - EDGE OF WATER
	LITTORAL PLANTING AREA
	PROPOSED PAVERS
	PROPOSED OFFSITE ASPHALT

NOTES:

1. ALL ELEVATIONS SHOWN HEREON ARE BASED ON THE NORTH AMERICAN VERTICAL DATUM OF 1988 (NGVD 1988).
2. SEE PLAT BY CAULFIELD & WHEELER, INC. FOR SITE GEOMETRY.
3. THE GRATE ELEVATIONS (G.E.) ARE THE EDGE OF PAVEMENT ELEVATION.
4. PAVERS SHALL BE INSTALLED PER THE DETAIL ON SHEET 20 IN THE LOCATIONS DESIGNATED ON THE PLAN VIEW.
5. DAMAGES TO LOOPS OR ANY SIGNAL EQUIPMENT CAUSED BY CONSTRUCTION OF THIS PROJECT MUST BE REPAIRED OR REPLACED TO ORIGINAL OR BETTER CONDITION AT NO COST TO PALM BEACH COUNTY.
6. CONTRACTOR SHALL CONTACT PALM BEACH COUNTY TRAFFIC OPERATIONS AT 561-233-3900 FORTY-EIGHT (48) HOURS PRIOR TO CONSTRUCTION IF WORK IS BEING DONE WITHIN 10 FEET OF ANY SIGNAL EQUIPMENT.
7. ALL CONSTRUCTION AND RESTORATION WORK WITHIN PALM BEACH COUNTY RIGHT OF WAY SHALL COMPLY WITH THE LATEST EDITION OF THE FDOT STANDARD INDEX AND THE FDOT STANDARD SPECIFICATIONS FOR ROAD AND BRIDGE CONSTRUCTION.
8. ALL HANDICAP RAMPS SHALL BE INSTALLED PER FDOT INDEX 304.

SCHNARS
ENGINEERING CORPORATION
947 Clint Moore Road
Boca Raton, Florida 33487
Certificate of Authorization #6640
Tel: (561) 241-6455
Fax: (561) 241-5182

OWNER: PULTE HOMES CORPORATION
1400 INDIAN CREEK PARKWAY
JUPITER, FLORIDA 33458

PROJECT: FIELDS AT GULFSTREAM POLO
PLAT ONE
PALM BEACH COUNTY FLORIDA

TASK: PAVING, GRADING & DRAINAGE PLAN

ORIGINAL: APRIL 2016
REVISIONS:
1 5/2/16 REV. D.E. WIDTHS
2 6/17/16 PBCLD COMMENTS
3
4
5
6
7
8
9
10
11
12

SEAL

Jeffrey T. Schnars, P.E.
Civil Engineer
Florida Registration No. 46697
FOR THE FIRM

JOB NO. 14132
DRAWN RAD
DESIGNED JTS
CHECKED JWM
Q.C. JTS
SHEET 8 OF 23

FILE 8
3.5D.35 PM
6/17/2016

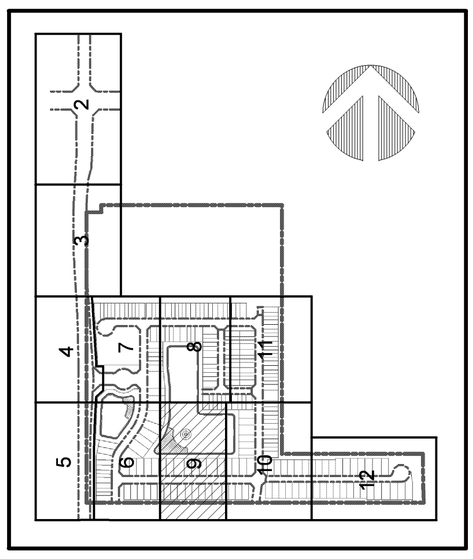

KEY MAP
NOT TO SCALE

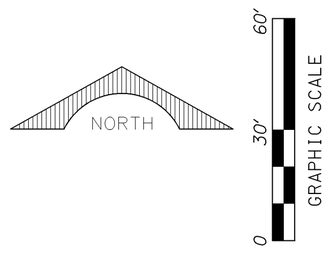

PAVING AND DRAINAGE LEGEND

- B.E. — BUFFER EASEMENT
- R.E. — RIM ELEVATION
- G.E. — GRATE ELEVATION
- I.E. — INVERT ELEVATION
- DIRECTION OF OVERLAND FLOW
- P.R.B. — POLLUTION RETARDANT BASIN
- F.F.=20.40 — FINISHED FLOOR ELEVATION
- CATCH BASIN G.E.= I.E.= — STRUCTURE DESIGNATION
- 100 LF / 15" — LENGTH, SIZE OF STORM DRAIN
- ×18.7' — EXISTING ELEVATION
- (15.30) — PROPOSED GRADE
- C-900 PVC
- DUCTILE IRON PIPE
- PLAT LIMITS
- EXISTING OR PROPOSED BY OTHERS INFORMATION
- 8" PVC WM — EXISTING UTILITIES
- 8" PVC WM — EXISTING UTILITIES TO BE REMOVED
- PROPOSED INFORMATION
- PROPOSED CONCRETE SIDEWALK
- SIDEWALK - REQUIRED IMPROVEMENTS
- LAKE - EDGE OF WATER
- LITTORAL PLANTING AREA
- PROPOSED PAVERS
- PROPOSED OFFSITE ASPHALT

NOTES:

1. ALL ELEVATIONS SHOWN HEREON ARE BASED ON THE NORTH AMERICAN VERTICAL DATUM OF 1988 (NGVD 1988).
2. SEE PLAT BY CAULFIELD & WHEELER, INC. FOR SITE GEOMETRY.
3. THE GRATE ELEVATIONS (G.E.) ARE THE EDGE OF PAVEMENT ELEVATION.
4. PAVERS SHALL BE INSTALLED PER THE DETAIL ON SHEET 20 IN THE LOCATIONS DESIGNATED ON THE PLAN VIEW.
5. DAMAGES TO LOOPS OR ANY SIGNAL EQUIPMENT CAUSED BY CONSTRUCTION OF THIS PROJECT MUST BE REPAIRED OR REPLACED TO ORIGINAL OR BETTER CONDITION AT NO COST TO PALM BEACH COUNTY.
6. CONTRACTOR SHALL CONTACT PALM BEACH COUNTY TRAFFIC OPERATIONS AT 561-233-3900 FORTY-EIGHT (48) HOURS PRIOR TO CONSTRUCTION IF WORK IS BEING DONE WITHIN 10 FEET OF ANY SIGNAL EQUIPMENT.
7. ALL CONSTRUCTION AND RESTORATION WORK WITHIN PALM BEACH COUNTY RIGHT OF WAY SHALL COMPLY WITH THE LATEST EDITION OF THE FDOT STANDARD INDEX AND THE FDOT STANDARD SPECIFICATIONS FOR ROAD AND BRIDGE CONSTRUCTION.
8. ALL HANDICAP RAMPS SHALL BE INSTALLED PER FDOT INDEX 304.

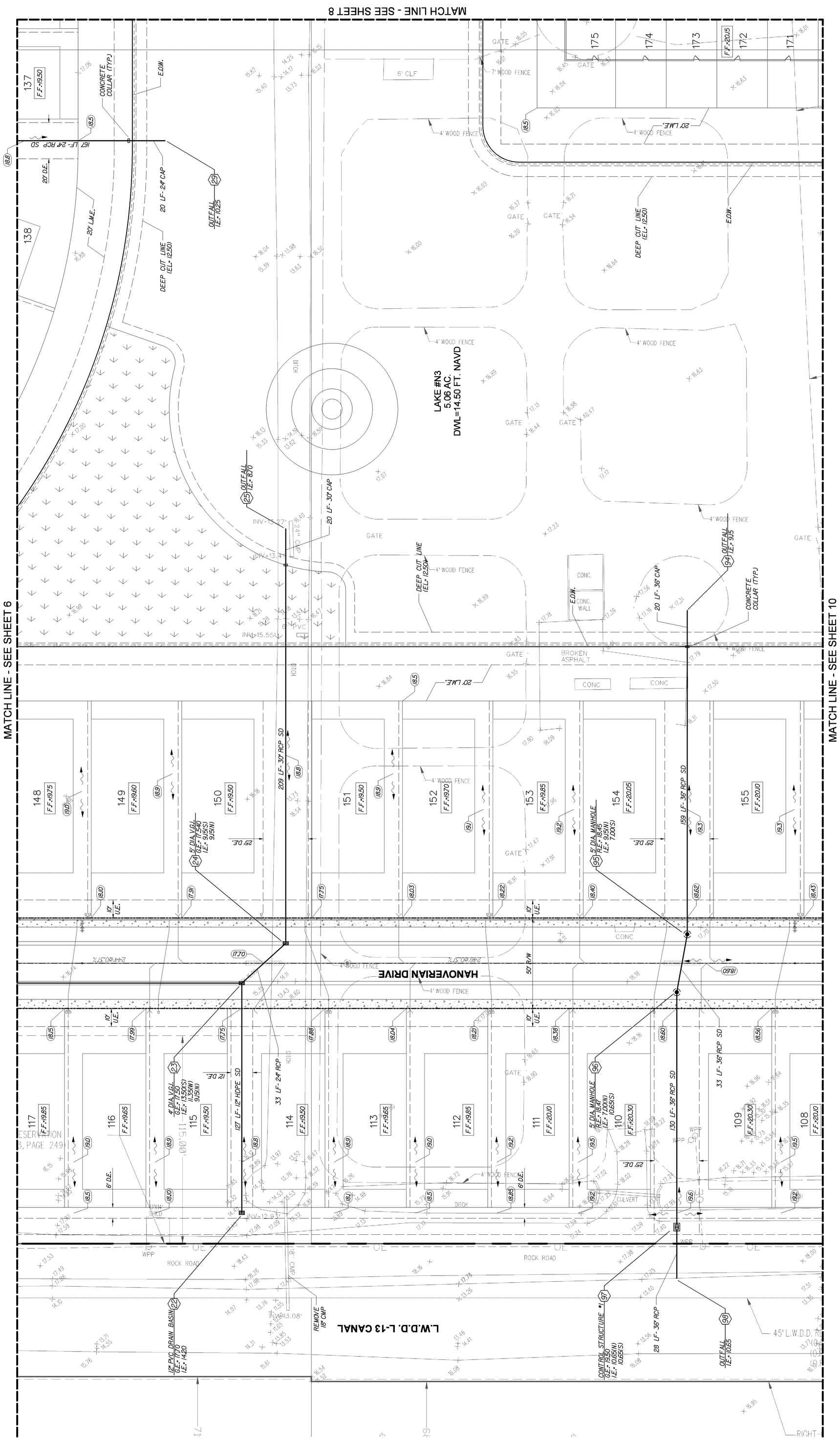

ORIGINAL: APRIL 2016	
REVISIONS: 1 6/17/16 PBCLD COMMENTS	
2	
3	
4	
5	
6	
7	
8	
9	
10	
11	
12	

JOB NO. 14132
DRAWN RAD
DESIGNED JTS
CHECKED JWM
Q.C. JTS
SHEET 9 OF 23

Jeffrey T. Schnars, P.E.
Civil Engineer
Registration No. 46697
Florida Registration (FDBPE) FIRM

SEAL

TASK:

PROJECT:

PAVING, GRADING & DRAINAGE PLAN

FIELDS AT GULFSTREAM POLO
PLAT ONE
PALM BEACH COUNTY
FLORIDA

OWNER:

PULTE HOMES CORPORATION
1400 INDIAN CREEK PARKWAY
JUPITER, FLORIDA 33458

SCHNARS
ENGINEERING CORPORATION
947 Clint Moore Road
Boca Raton, Florida 33487
Certificate of Authorization #6640
Tel: (561) 241-6455
Fax: (561) 241-5182

6/17/2016 5:33:04 PM $FILE$

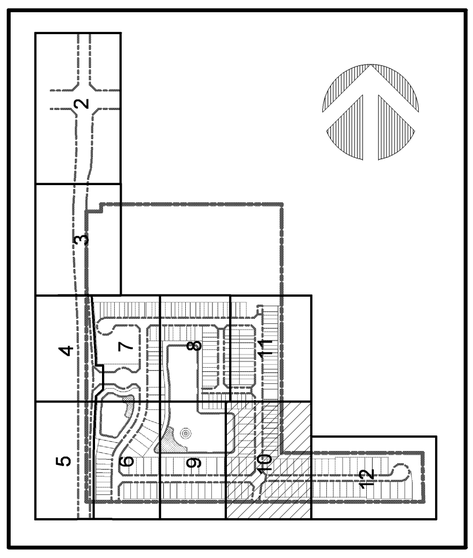

KEY MAP
NOT TO SCALE

NORTH

0 30' 60'
GRAPHIC SCALE

PAVING AND DRAINAGE LEGEND

- B.E. BUFFER EASEMENT
- R.E. RIM ELEVATION
- G.E. GRATE ELEVATION
- I.E. INVERT ELEVATION
- DIRECTION OF OVERLAND FLOW
- P.R.B. POLLUTION RETARDANT BASIN
- F.F.=21.40 FINISHED FLOOR ELEVATION
- CATCH BASIN G.E.= I.E.= STRUCTURE DESIGNATION
- 100 LF / 15" LENGTH, SIZE OF STORM DRAIN
- ×18.7' EXISTING ELEVATION
- (15.30) PROPOSED GRADE
- C-900 PVC
- DUCTILE IRON PIPE
- PLAT LIMITS
- EXISTING OR PROPOSED BY OTHERS INFORMATION
- 8" PVC WM EXISTING UTILITIES
- EXISTING UTILITIES TO BE REMOVED
- PROPOSED INFORMATION
- PROPOSED CONCRETE SIDEWALK
- SIDEWALK - REQUIRED IMPROVEMENTS
- LAKE - EDGE OF WATER
- LITTORAL PLANTING AREA
- PROPOSED PAVERS
- PROPOSED OFFSITE ASPHALT

NOTES:

1. ALL ELEVATIONS SHOWN HEREON ARE BASED ON THE NORTH AMERICAN VERTICAL DATUM OF 1988 (NGVD 1988).
2. SEE PLAT BY CAULFIELD & WHEELER, INC. FOR SITE GEOMETRY.
3. THE GRATE ELEVATIONS (G.E.) ARE THE EDGE OF PAVEMENT ELEVATION.
4. PAVERS SHALL BE INSTALLED PER THE DETAIL ON SHEET 20 IN THE LOCATIONS DESIGNATED ON THE PLAN VIEW.
5. DAMAGES TO LOOPS OR ANY SIGNAL EQUIPMENT CAUSED BY CONSTRUCTION OF THIS PROJECT MUST BE REPAIRED OR REPLACED TO ORIGINAL OR BETTER CONDITION AT NO COST TO PALM BEACH COUNTY.
6. CONTRACTOR SHALL CONTACT PALM BEACH COUNTY TRAFFIC OPERATIONS AT 561-233-3900 FORTY-EIGHT (48) HOURS PRIOR TO CONSTRUCTION IF WORK IS BEING DONE WITHIN 10 FEET OF ANY SIGNAL EQUIPMENT.
7. ALL CONSTRUCTION AND RESTORATION WORK WITHIN PALM BEACH COUNTY RIGHT OF WAY SHALL COMPLY WITH THE LATEST EDITION OF THE FDOT STANDARD INDEX AND THE FDOT STANDARD SPECIFICATIONS FOR ROAD AND BRIDGE CONSTRUCTION.
8. ALL HANDICAP RAMPS SHALL BE INSTALLED PER FDOT INDEX 304.

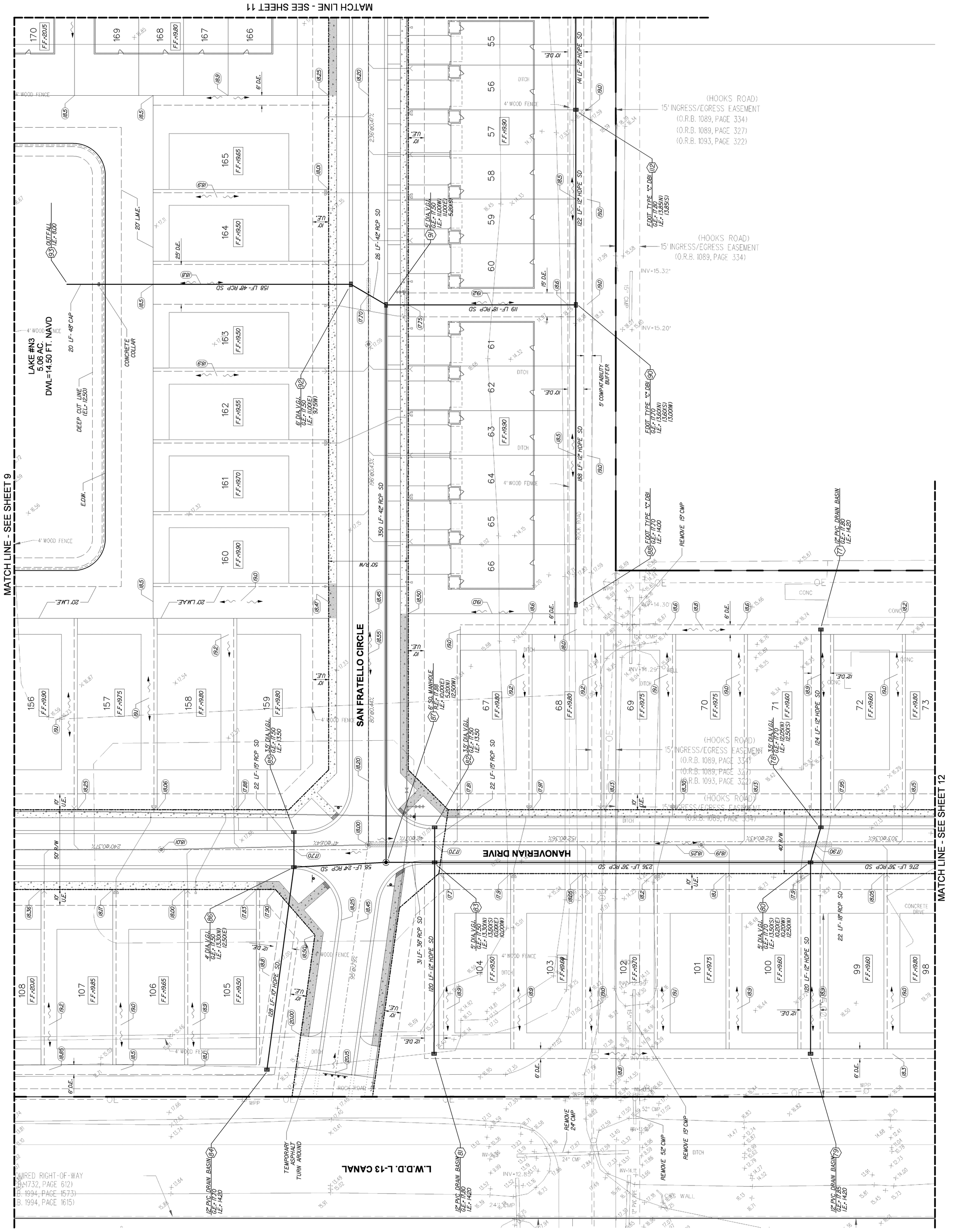

ORIGINAL: APRIL 2016

REVISIONS:
1 5/2/16 REV. D.E. WIDTHS
2 6/17/16 PBC TC COMMENTS
3
4
5
6
7
8
9
10
11
12

JOB NO. 14132
DRAWN RAD
DESIGNED JTS
CHECKED JWM
Q.C. JTS
SHEET 10 OF 23

Jeffrey T. Schnars, P.E.
Civil Engineer
Florida Registration No. 46697
(FDOT PE FIRM)

SEAL

TASK:

PAVING, GRADING & DRAINAGE PLAN

PROJECT:

FIELDS AT GULFSTREAM POLO
PLAT ONE
PALM BEACH COUNTY
FLORIDA

OWNER:

PULTE HOMES CORPORATION
1400 INDIAN CREEK PARKWAY
JUPITER, FLORIDA 33458

SCHNARS
ENGINEERING CORPORATION
947 Clint Moore Road
Boca Raton, Florida 33487
Certificate of Authorization #6640
Tel: (561) 241-6455
Fax: (561) 241-5182

6/20/2016 9:09:43 AM $FILE$

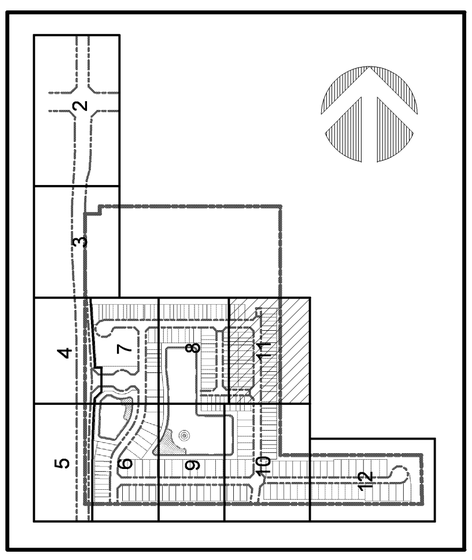

KEY MAP
NOT TO SCALE

NORTH

0 30' 60'
GRAPHIC SCALE

PAVING AND DRAINAGE LEGEND

B.E.	BUFFER EASEMENT
R.E.	RIM ELEVATION
G.E.	GRATE ELEVATION
I.E.	INVERT ELEVATION
	DIRECTION OF OVERLAND FLOW
P.R.B.	POLLUTION RETARDANT BASIN
F.F.=20.40	FINISHED FLOOR ELEVATION
CATCH BASIN G.E.= I.E.=	STRUCTURE DESIGNATION
100 LF / 15"	LENGTH, SIZE OF STORM DRAIN
×18.7'	EXISTING ELEVATION
(15.30)	PROPOSED GRADE
	C-900 PVC
	DUCTILE IRON PIPE
	PLAT LIMITS
	EXISTING OR PROPOSED BY OTHERS INFORMATION
8" PVC WM	EXISTING UTILITIES
	EXISTING UTILITIES TO BE REMOVED
	PROPOSED INFORMATION
	PROPOSED CONCRETE SIDEWALK
	SIDEWALK - REQUIRED IMPROVEMENTS
	LAKE - EDGE OF WATER
	LITTORAL PLANTING AREA
	PROPOSED PAVERS
	PROPOSED OFFSITE ASPHALT

NOTES:

1. ALL ELEVATIONS SHOWN HEREON ARE BASED ON THE NORTH AMERICAN VERTICAL DATUM OF 1988 (NGVD 1988).
2. SEE PLAT BY CAULFIELD & WHEELER, INC. FOR SITE GEOMETRY.
3. THE GRATE ELEVATIONS (G.E.) ARE THE EDGE OF PAVEMENT ELEVATION.
4. PAVERS SHALL BE INSTALLED PER THE DETAIL ON SHEET 20 IN THE LOCATIONS DESIGNATED ON THE PLAN VIEW.
5. DAMAGES TO LOOPS OR ANY SIGNAL EQUIPMENT CAUSED BY CONSTRUCTION OF THIS PROJECT MUST BE REPAIRED OR REPLACED TO ORIGINAL OR BETTER CONDITION AT NO COST TO PALM BEACH COUNTY.
6. CONTRACTOR SHALL CONTACT PALM BEACH COUNTY TRAFFIC OPERATIONS AT 561-233-3900 FORTY-EIGHT (48) HOURS PRIOR TO CONSTRUCTION IF WORK IS BEING DONE WITHIN 10 FEET OF ANY SIGNAL EQUIPMENT.
7. ALL CONSTRUCTION AND RESTORATION WORK WITHIN PALM BEACH COUNTY RIGHT OF WAY SHALL COMPLY WITH THE LATEST EDITION OF THE FDOT STANDARD INDEX AND THE FDOT STANDARD SPECIFICATIONS FOR ROAD AND BRIDGE CONSTRUCTION.
8. ALL HANDICAP RAMPS SHALL BE INSTALLED PER FDOT INDEX 304.

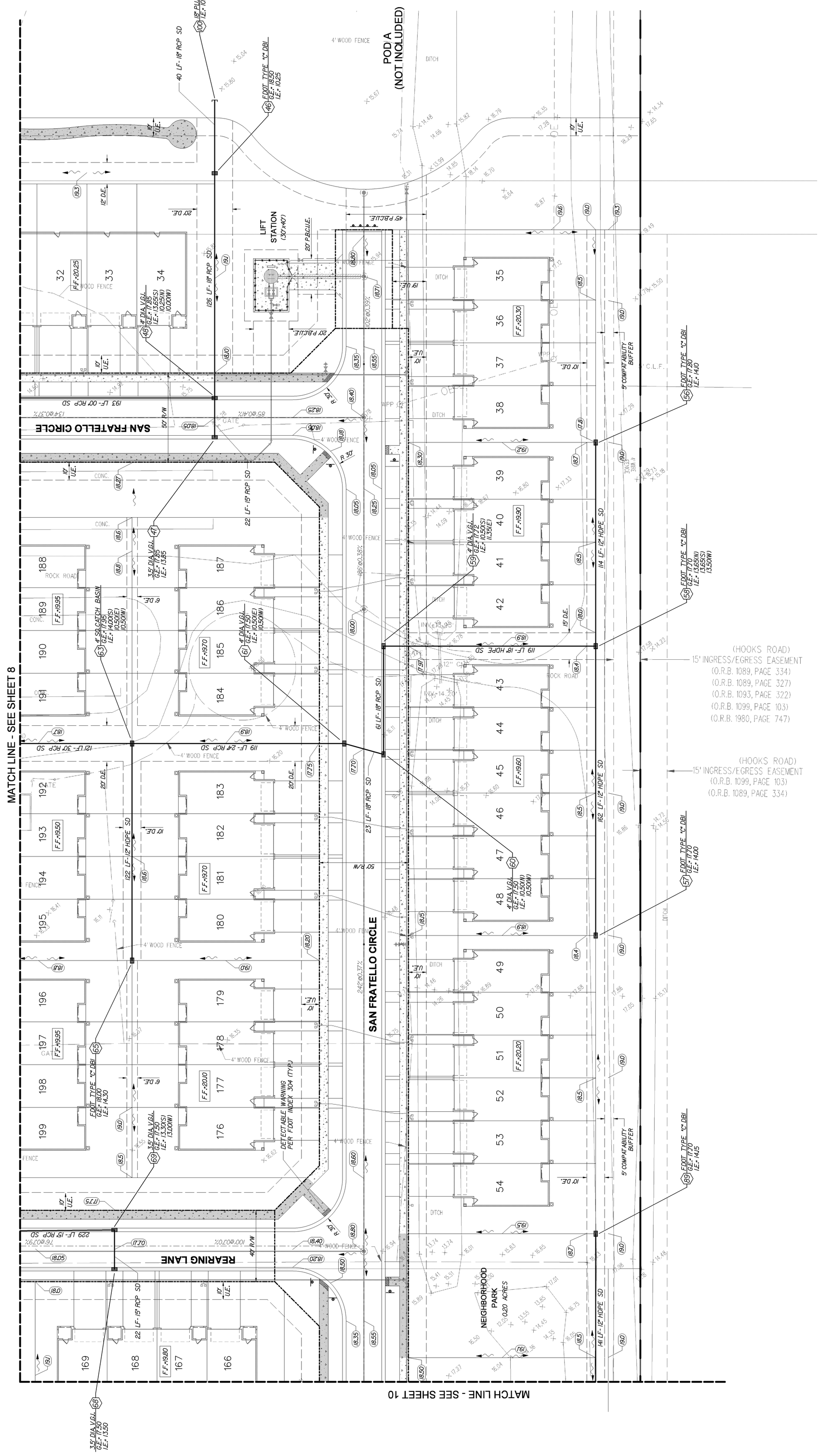

JOB NO.	14132
DRAWN	RAD
DESIGNED	JTS
CHECKED	JWM
Q.C.	JTS
SHEET	11 OF 23

Jeffrey T. Schnars, P.E.
Civil Engineer
Registration No. 46697
Florida Registration (FBPE) FIRM

SEAL

ORIGINAL: APRIL 2016

REVISIONS:
1 5/2/16 REV. D.E. WIDTHS
2 6/17/16 PBC TC COMMENTS
3
4
5
6
7
8
9
10
11
12

TASK:

PAVING, GRADING & DRAINAGE PLAN

PROJECT:

FIELDS AT GULFSTREAM POLO
PLAT ONE
PALM BEACH COUNTY FLORIDA

OWNER:

PULTE HOMES CORPORATION
1400 INDIAN CREEK PARKWAY
JUPITER, FLORIDA 33458

SCHNARS ENGINEERING CORPORATION
947 Clint Moore Road
Boca Raton, Florida 33487
Certificate of Authorization #6640
Tel: (561) 241-6455
Fax: (561) 241-5182

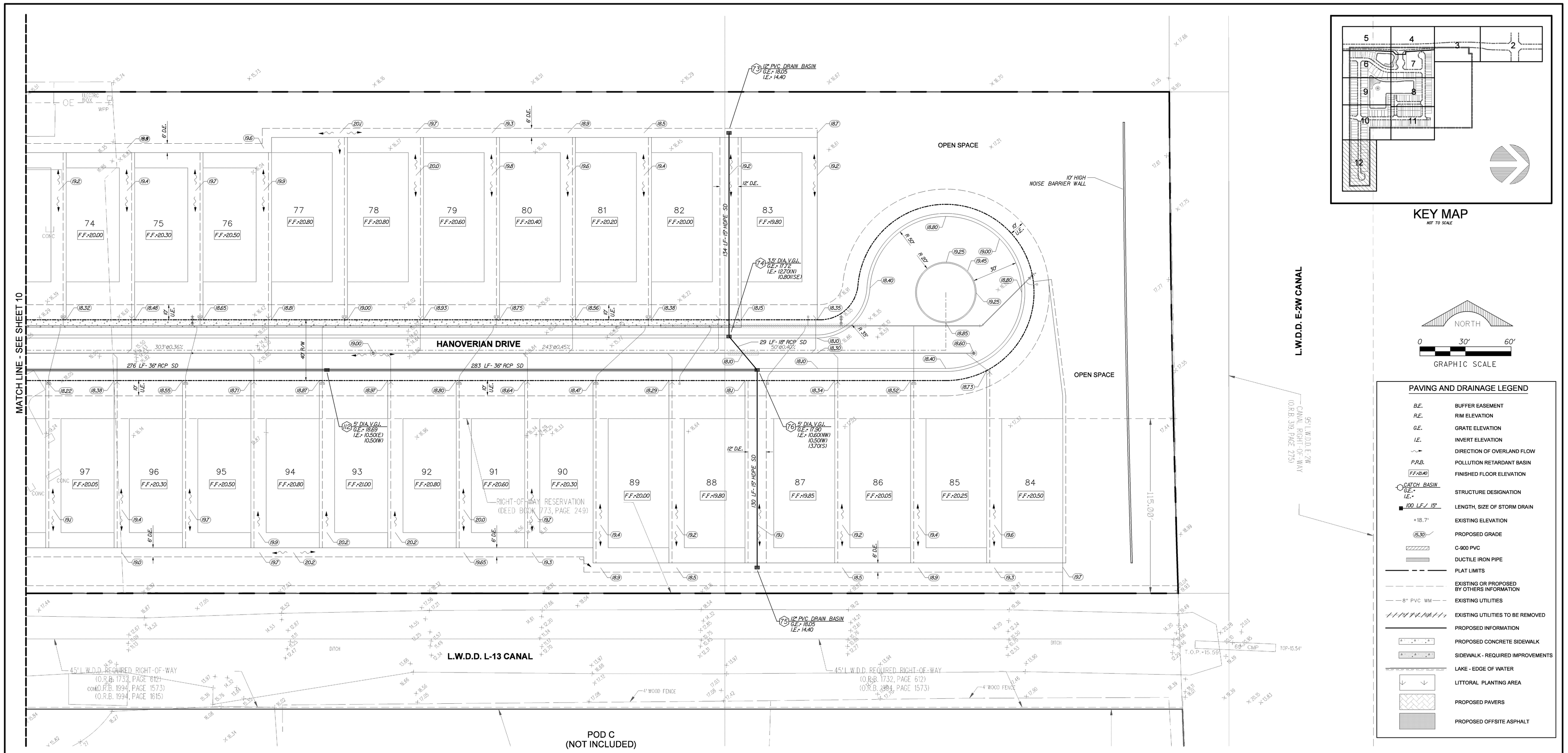

NOTES:

1. ALL ELEVATIONS SHOWN HEREON ARE BASED ON THE NORTH AMERICAN VERTICAL DATUM OF 1988 (NGVD 1988).
2. SEE PLAT BY CAULFIELD & WHEELER, INC. FOR SITE GEOMETRY.
3. THE GRATE ELEVATIONS (G.E.) ARE THE EDGE OF PAVEMENT ELEVATION.
4. PAVERS SHALL BE INSTALLED PER THE DETAIL ON SHEET 20 IN THE LOCATIONS DESIGNATED ON THE PLAN VIEW.
5. DAMAGES TO LOOPS OR ANY SIGNAL EQUIPMENT CAUSED BY CONSTRUCTION OF THIS PROJECT MUST BE REPAIRED OR REPLACED TO ORIGINAL OR BETTER CONDITION AT NO COST TO PALM BEACH COUNTY.
6. CONTRACTOR SHALL CONTACT PALM BEACH COUNTY TRAFFIC OPERATIONS AT 561-233-3900 FORTY-EIGHT (48) HOURS PRIOR TO CONSTRUCTION IF WORK IS BEING DONE WITHIN 10 FEET OF ANY SIGNAL EQUIPMENT.
7. ALL CONSTRUCTION AND RESTORATION WORK WITHIN PALM BEACH COUNTY RIGHT OF WAY SHALL COMPLY WITH THE LATEST EDITION OF THE FDOT STANDARD INDEX AND THE FDOT STANDARD SPECIFICATIONS FOR ROAD AND BRIDGE CONSTRUCTION.
8. ALL HANDICAP RAMPS SHALL BE INSTALLED PER FDOT INDEX 304.

SCHNARS
ENGINEERING CORPORATION
947 Clint Moore Road
Boca Raton, Florida 33487
Certificate of Authorization #6640
Tel: (561) 241-6455
Fax: (561) 241-5182

OWNER: PULTE HOMES CORPORATION
1400 INDIAN CREEK PARKWAY
JUPITER, FLORIDA 33458

PROJECT: FIELDS AT GULFSTREAM POLO
PLAT ONE
PALM BEACH COUNTY FLORIDA

TASK: PAVING, GRADING & DRAINAGE PLAN

ORIGINAL: APRIL 2016
REVISIONS: 1 2 3 4 5 6 7 8 9 10 11 12

SEAL
Jeffrey T. Schnars, P.E.
Civil Engineer
Florida Registration No. 46697
(FOR THE FIRM)

JOB NO. 14132
DRAWN RAD
DESIGNED JTS
CHECKED JWM
Q.C. JTS
SHEET 12 OF 23

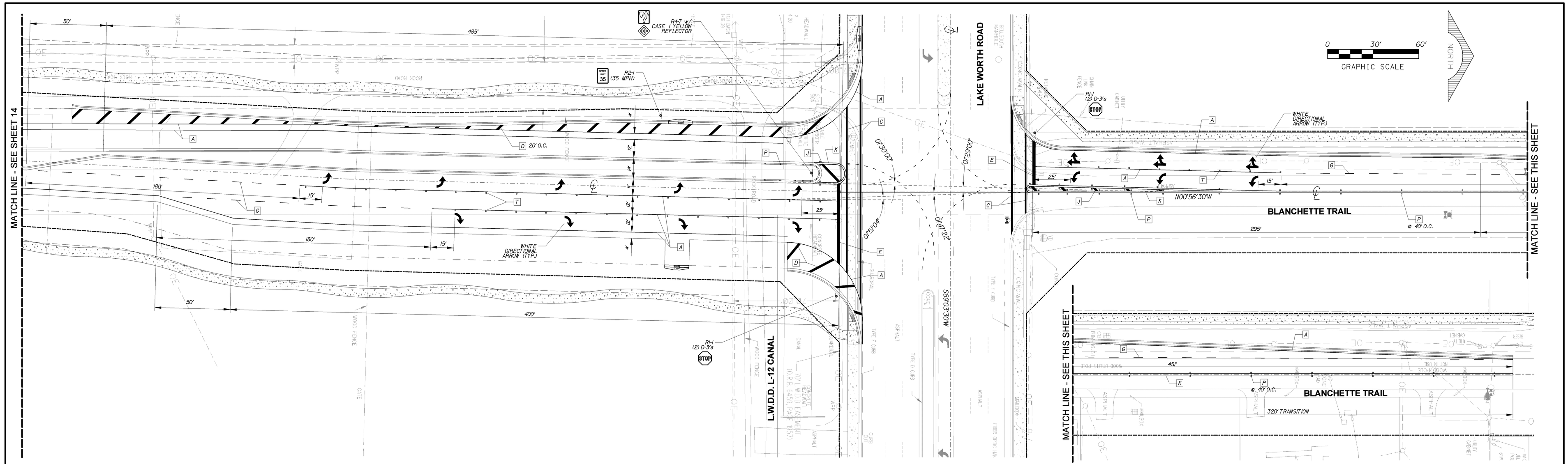

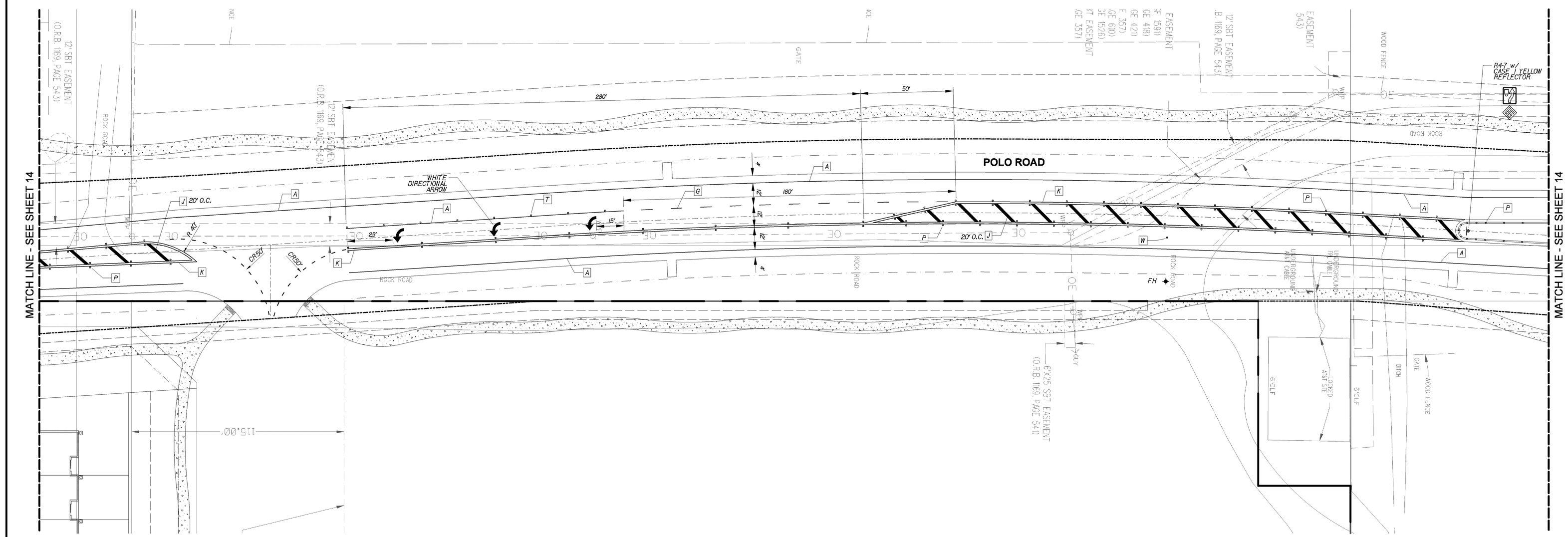

NOTES:

1. PAVEMENT MARKINGS AND GEOMETRICS SHALL BE IN ACCORDANCE WITH THE MANUAL ON UNIFORM TRAFFIC CONTROL DEVICES FOR STREETS AND HIGHWAYS AND PALM BEACH COUNTY TYPICAL No.T-P-13.
2. ALL PARKING SPACE PAVEMENT MARKINGS SHALL BE PAINT. ALL OTHER PAVEMENT MARKINGS IN ASPHALT AREAS SHALL BE THERMOPLASTIC. PAVEMENT MARKINGS IN PAVER AREAS SHALL BE REFLECTORIZED COLOR APPROPRIATE PAVERS PER P.B.C. TYPICAL NO.T-P-13 OR REFLECTORIZED EPOXY PAINT. PAVEMENT MARKINGS IN PAVER PARKING SPACES SHALL BE COLOR APPROPRIATE PAVERS.
3. THESE INSTALLATIONS SHALL BE IN ACCORDANCE WITH THE FLORIDA DEPARTMENT OF TRANSPORTATION STANDARD SPECIFICATIONS FOR ROAD AND BRIDGE CONSTRUCTION LATEST EDITION. HOWEVER, WHERE CONFLICTS EXIST, THIS TYPICALLY SHALL TAKE PRECEDENT OVER FDOT STANDARD SPECIFICATIONS.
4. ALL REFLECTIVE PAVEMENT MARKERS SHALL BE APPROVED BY PALM BEACH COUNTY TRAFFIC ENGINEERING BEFORE INSTALLATION.
5. ONE BLUE REFLECTOR SHALL BE PLACED AT ALL FIRE HYDRANT LOCATIONS IN THE CENTER OF THE ADJACENT TRAVEL LANE.
6. ALL R1-1, R2-1 AND D3's SHALL BE DIAMOND GRADE REFLECTIVE SHEETING MATERIAL & SHALL BE IN ACCORDANCE WITH PALM BEACH COUNTY TYPICAL T-P-13.
7. TEMPORARY PAVEMENT MARKINGS ON FIRST LIFT OF ASPHALT SHALL BE PAINT.
8. ALL PARKING SPACES SHALL BE DOUBLE STRIPED PER DETAIL ON SHEET 20.

STRIPING KEY

A - 6" SOLID WHITE
B - 8" SOLID WHITE
C - 12" SOLID WHITE
D - 18" SOLID WHITE
E - 24" SOLID WHITE
F - 6" SKIP WHITE TYP (10'- 30')
G - 6" SKIP WHITE TYP (6'- 10')
H - 6" SKIP WHITE TYP (2'- 4')
I - 6" SOLID YELLOW
J - 18" SOLID YELLOW
K - 6" DOUBLE YELLOW
L - 6" SKIP YELLOW TYP (10'- 30')
M - 6" SKIP YELLOW TYP (6'- 10')
N - 6" SKIP YELLOW TYP (2'- 4')
P - RPM BI-DIRECTIONAL AMBER/AMBER
R - FDP WHITE
S - FDP YELLOW
T - RPM BI-DIRECTIONAL WHITE/RED
U - RPM BI-DIRECTIONAL RED/YELLOW
W - RPM BI-DIRECTIONAL BLUE/BLUE

SCHNARS ENGINEERING CORPORATION
947 Clint Moore Road
Boca Raton, Florida 33487
Certificate of Authorization #6640
Tel: (561) 241-6455
Fax: (561) 241-5182

OWNER: PULTE HOMES CORPORATION
1400 INDIAN CREEK PARKWAY
JUPITER, FLORIDA 33458

PROJECT: FIELDS AT GULFSTREAM POLO
PLAT ONE
PALM BEACH COUNTY FLORIDA

TASK: PAVEMENT MARKING & SIGNAGE PLAN

ORIGINAL: APRIL 2016
REVISIONS:
1 6/17/16 PBC TRAFFIC
2
3
4
5
6
7
8
9
10
11
12

SEAL

Jeffrey T. Schnars, P.E.
Civil Engineer
Florida Registration No. 46697
(FOR THE FIRM)

JOB NO. 14132
DRAWN RAD
DESIGNED JTS
CHECKED JWM
Q.C. JTS
SHEET 13 OF 23

8/11/16
SCALE: AS
K:\2014\2016

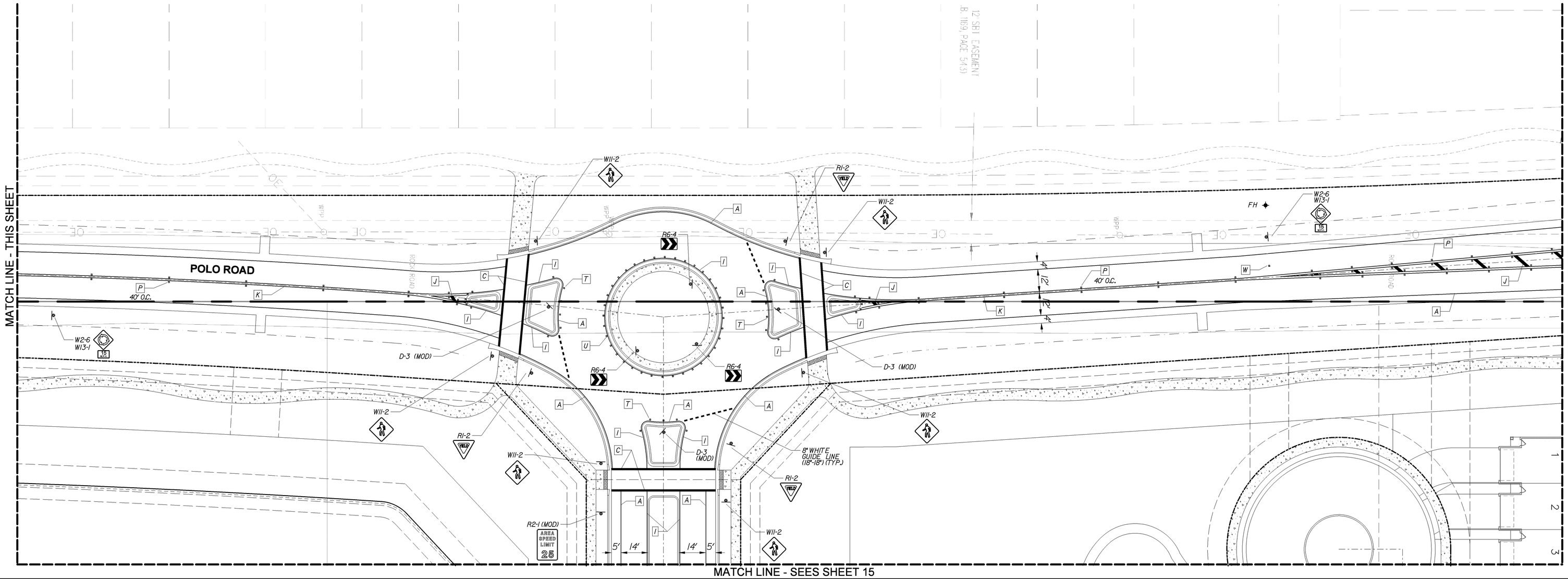

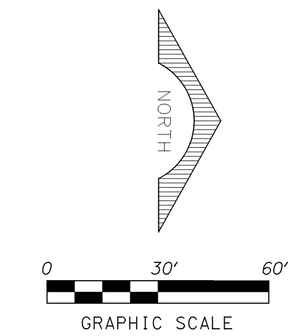

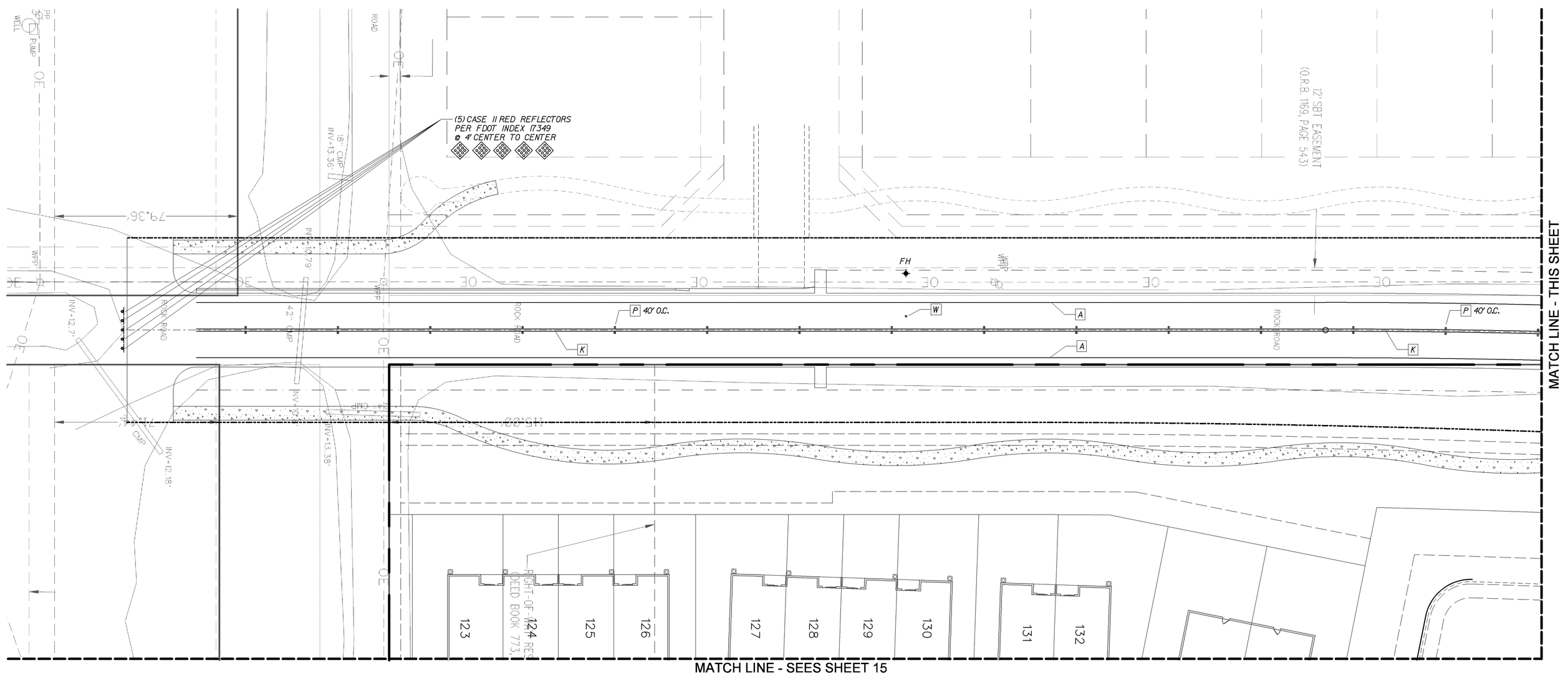

NOTES:

1. PAVEMENT MARKINGS AND GEOMETRICS SHALL BE IN ACCORDANCE WITH THE MANUAL ON UNIFORM TRAFFIC CONTROL DEVICES FOR STREETS AND HIGHWAYS AND PALM BEACH COUNTY TYPICAL No.T-P-13.
2. ALL PARKING SPACE PAVEMENT MARKINGS SHALL BE PAINT. ALL OTHER PAVEMENT MARKINGS IN ASPHALT AREAS SHALL BE THERMOPLASTIC. PAVEMENT MARKINGS IN PAVER AREAS SHALL BE REFLECTORIZED COLOR APPROPRIATE PAVERS PER P.B.C. TYPICAL NO.T-P-13 OR REFLECTORIZED EPOXY PAINT. PAVEMENT MARKINGS IN PAVER PARKING SPACES SHALL BE COLOR APPROPRIATE PAVERS.
3. THESE INSTALLATIONS SHALL BE IN ACCORDANCE WITH THE FLORIDA DEPARTMENT OF TRANSPORTATION STANDARD SPECIFICATIONS FOR ROAD AND BRIDGE CONSTRUCTION LATEST EDITION. HOWEVER, WHERE CONFLICTS EXIST. THIS TYPICALLY SHALL TAKE PRECEDENT OVER FDOT STANDARD SPECIFICATIONS.
4. ALL REFLECTIVE PAVEMENT MARKERS SHALL BE APPROVED BY PALM BEACH COUNTY TRAFFIC ENGINEERING BEFORE INSTALLATION.
5. ONE BLUE REFLECTOR SHALL BE PLACED AT ALL FIRE HYDRANT LOCATIONS IN THE CENTER OF THE ADJACENT TRAVEL LANE.
6. ALL R1-1, R2-1 AND D3's SHALL BE DIAMOND GRADE REFLECTIVE SHEETING MATERIAL & SHALL BE IN ACCORADANCE WITH PALM BEACH COUNTY TYPICAL T-P-13.
7. TEMPORARY PAVEMENT MARKINGS ON FIRST LIFT OF ASPHALT SHALL BE PAINT.
8. ALL PARKING SPACES SHALL BE DOUBLE STRIPED PER DETAIL ON SHEET 20.

STRIPING KEY

A - 6" SOLID WHITE
B - 8" SOLID WHITE
C - 12" SOLID WHITE
D - 18" SOLID WHITE
E - 24" SOLID WHITE
F - 6" SKIP WHITE TYP (10'- 30')
G - 6" SKIP WHITE TYP (6'- 10')
H - 6" SKIP WHITE TYP (2'- 4')
I - 6" SOLID YELLOW
J - 18" SOLID YELLOW
K - 6" DOUBLE YELLOW
L - 6" SKIP YELLOW TYP (10'- 30')
M - 6" SKIP YELLOW TYP (6'- 10')
N - 6" SKIP YELLOW TYP (2'- 4')
P - RPM BI-DIRECTIONAL AMBER/AMBER
R - FDP WHITE
S - FDP YELLOW
T - RPM BI-DIRECTIONAL WHITE/RED
U - RPM BI-DIRECTIONAL RED/YELLOW
W - RPM BI-DIRECTIONAL BLUE/BLUE

SCHNARS
ENGINEERING CORPORATION
947 Clint Moore Road
Boca Raton, Florida 33487
Certificate of Authorization #6640
Tel: (561) 241-6455
Fax: (561) 241-5182

OWNER: PULTE HOMES CORPORATION
1400 INDIAN CREEK PARKWAY
JUPITER, FLORIDA 33458

PROJECT: FIELDS AT GULFSTREAM POLO
PLAT ONE
PALM BEACH COUNTY FLORIDA

TASK: PAVEMENT MARKING & SIGNAGE PLAN

ORIGINAL: APRIL 2016
REVISIONS:
1 6/17/16 PBC TRAFFIC
2
3
4
5
6
7
8
9
10
11
12

SEAL

Jeffrey T. Schnars, P.E.
Civil Engineer
Florida Registration No. 46697
(FOR THE FIRM)

JOB NO. 14132
DRAWN RAD
DESIGNED JTS
CHECKED JWM
Q.C. JTS
SHEET 14 OF 23

NORTH

0 60' 120'
GRAPHIC SCALE

NOTES:

1. PAVEMENT MARKINGS AND GEOMETRICS SHALL BE IN ACCORDANCE WITH THE MANUAL ON UNIFORM TRAFFIC CONTROL DEVICES FOR STREETS AND HIGHWAYS AND PALM BEACH COUNTY TYPICAL No.T-P-13.
2. ALL PARKING SPACE PAVEMENT MARKINGS SHALL BE PAINT. ALL OTHER PAVEMENT MARKINGS IN ASPHALT AREAS SHALL BE THERMOPLASTIC. PAVEMENT MARKINGS IN PAVER AREAS SHALL BE REFLECTORIZED COLOR APPROPRIATE PAVERS PER P.B.C. TYPICAL NO.T-P-13 OR REFLECTORIZED EPOXY PAINT. PAVEMENT MARKINGS IN PAVER PARKING SPACES SHALL BE COLOR APPROPRIATE PAVERS.
3. THESE INSTALLATIONS SHALL BE IN ACCORDANCE WITH THE FLORIDA DEPARTMENT OF TRANSPORTATION STANDARD SPECIFICATIONS FOR ROAD AND BRIDGE CONSTRUCTION LATEST EDITION. HOWEVER, WHERE CONFLICTS EXIST, THIS TYPICALLY SHALL TAKE PRECEDENT OVER FDOT STANDARD SPECIFICATIONS.
4. ALL REFLECTIVE PAVEMENT MARKERS SHALL BE APPROVED BY PALM BEACH COUNTY TRAFFIC ENGINEERING BEFORE INSTALLATION.
5. ONE BLUE REFLECTOR SHALL BE PLACED AT ALL FIRE HYDRANT LOCATIONS IN THE CENTER OF THE ADJACENT TRAVEL LANE.
6. ALL R1-1, R2-1 AND D3's SHALL BE DIAMOND GRADE REFLECTIVE SHEETING MATERIAL & SHALL BE IN ACCORDANCE WITH PALM BEACH COUNTY TYPICAL T-P-13.
7. TEMPORARY PAVEMENT MARKINGS ON FIRST LIFT OF ASPHALT SHALL BE PAINT.
8. ALL PARKING SPACES SHALL BE DOUBLE STRIPED PER DETAIL ON SHEET 20.

STRIPING KEY

A - 6" SOLID WHITE
B - 8" SOLID WHITE
C - 12" SOLID WHITE
D - 18" SOLID WHITE
E - 24" SOLID WHITE
F - 6" SKIP WHITE TYP (10'- 30')
G - 6" SKIP WHITE TYP (6'- 10')
H - 6" SKIP WHITE TYP (2'- 4')
I - 6" SOLID YELLOW
J - 18" SOLID YELLOW
K - 6" DOUBLE YELLOW
L - 6" SKIP YELLOW TYP (10'- 30')
M - 6" SKIP YELLOW TYP (6'- 10')
N - 6" SKIP YELLOW TYP (2'- 4')
P - RPM BI-DIRECTIONAL AMBER/AMBER
R - FDP WHITE
S - FDP YELLOW
T - RPM BI-DIRECTIONAL WHITE/RED
U - RPM BI-DIRECTIONAL RED/YELLOW
W - RPM BI-DIRECTIONAL BLUE/BLUE

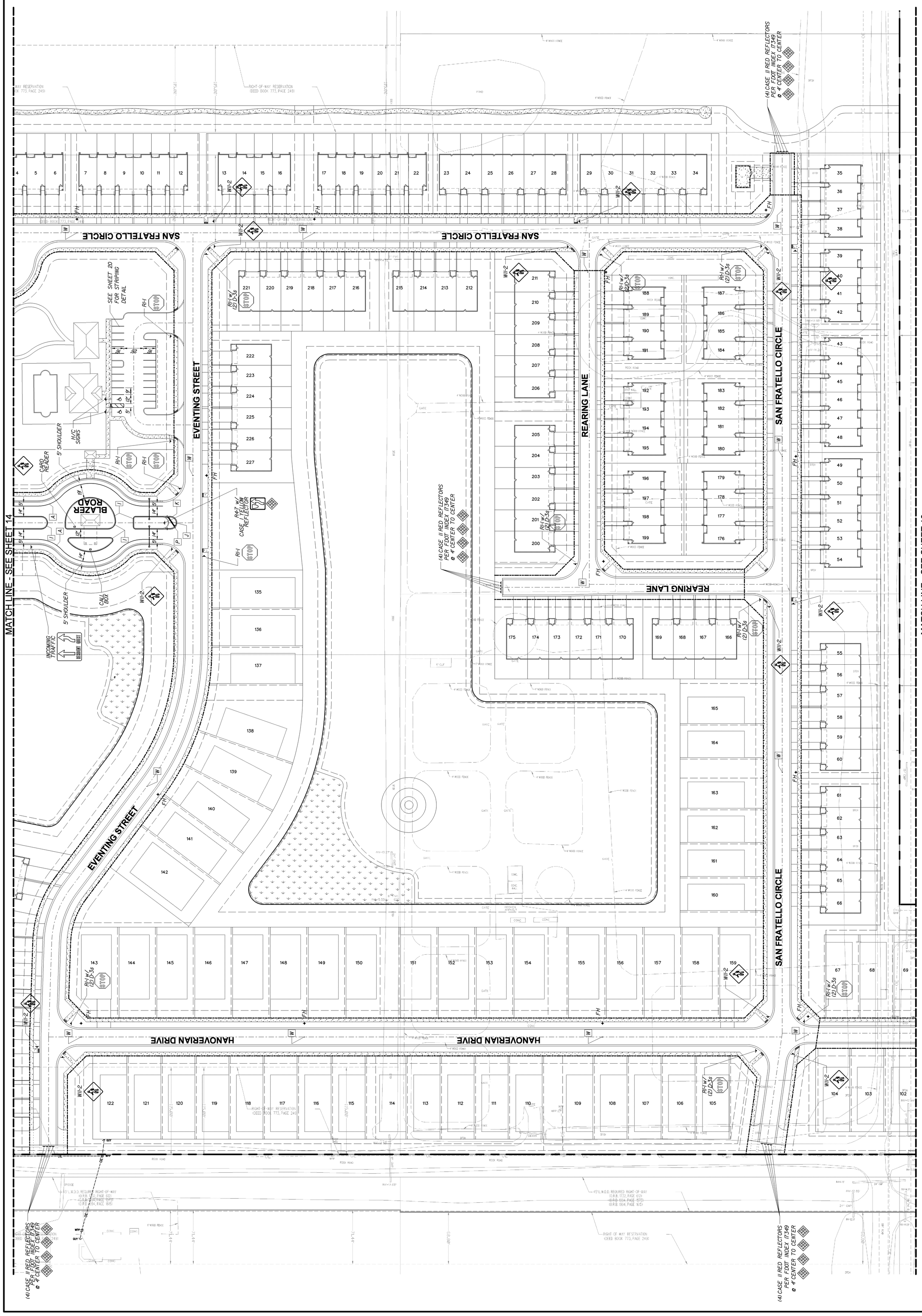

JOB NO. 14132
DRAWN RAD
DESIGNED JTS
CHECKED JWM
Q.C. JTS
SHEET 15 OF 23

Jeffrey T. Schnars, P.E.
Civil Engineer
Registration No. 46697
Florida Reg. Certificate of Authorization No. 6640 (FDOT PE FIRM)

SEAL

ORIGINAL: APRIL 2016
REVISIONS:
1 6/17/16 PBC TRAFFIC
2
3
4
5
6
7
8
9
10
11
12

TASK: PAVEMENT MARKING & SIGNAGE PLAN

PROJECT: FIELDS AT GULFSTREAM POLO
PLAT ONE
PALM BEACH COUNTY FLORIDA

OWNER: PULTE HOMES CORPORATION
1400 INDIAN CREEK PARKWAY
JUPITER, FLORIDA 33458

SCHNARS ENGINEERING CORPORATION
947 Clint Moore Road
Boca Raton, Florida 33487
Certificate of Authorization #6640
Tel: (561) 241-6455
Fax: (561) 241-5182

6/20/2016 9:49:17 AM $FILE$

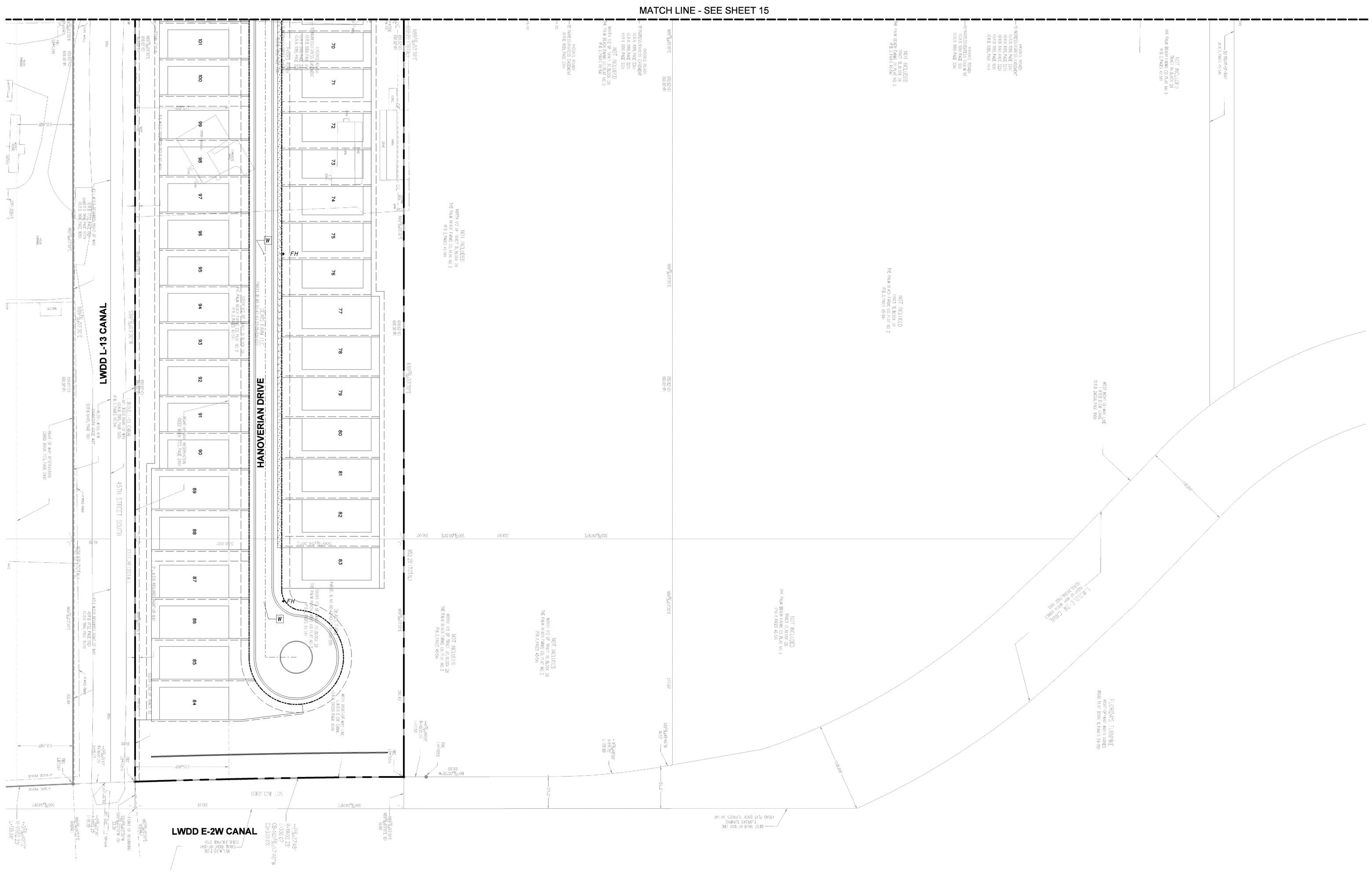

NOTES:

1. PAVEMENT MARKINGS AND GEOMETRICS SHALL BE IN ACCORDANCE WITH THE MANUAL ON UNIFORM TRAFFIC CONTROL DEVICES FOR STREETS AND HIGHWAYS AND PALM BEACH COUNTY TYPICAL No.T-P-13.
2. ALL PARKING SPACE PAVEMENT MARKINGS SHALL BE PAINT. ALL OTHER PAVEMENT MARKINGS IN ASPHALT AREAS SHALL BE THERMOPLASTIC. PAVEMENT MARKINGS IN PAVER AREAS SHALL BE REFLECTORIZED COLOR APPROPRIATE PAVERS PER P.B.C. TYPICAL NO.T-P-13 OR REFLECTORIZED EPOXY PAINT. PAVEMENT MARKINGS IN PAVER PARKING SPACES SHALL BE COLOR APPROPRIATE PAVERS.
3. THESE INSTALLATIONS SHALL BE IN ACCORDANCE WITH THE FLORIDA DEPARTMENT OF TRANSPORTATION STANDARD SPECIFICATIONS FOR ROAD AND BRIDGE CONSTRUCTION LATEST EDITION. HONEVER, WHERE CONFLICTS EXIST, THIS TYPICALLY SHALL TAKE PRECEDENT OVER FDOT STANDARD SPECIFICATIONS.
4. ALL REFLECTIVE PAVEMENT MARKERS SHALL BE APPROVED BY PALM BEACH COUNTY TRAFFIC ENGINEERING BEFORE INSTALLATION.
5. ONE BLUE REFLECTOR SHALL BE PLACED AT ALL FIRE HYDRANT LOCATIONS IN THE CENTER OF THE ADJACENT TRAVEL LANE.
6. ALL R1-1, R2-1 AND D3's SHALL BE DIAMOND GRADE REFLECTIVE SHEETING MATERIAL & SHALL BE IN ACCORDANCE WITH PALM BEACH COUNTY TYPICAL T-P-13.
7. TEMPORARY PAVEMENT MARKINGS ON FIRST LIFT OF ASPHALT SHALL BE PAINT.
8. ALL PARKING SPACES SHALL BE DOUBLE STRIPED PER DETAIL ON SHEET 20.

STRIPING KEY

A - 6" SOLID WHITE
B - 8" SOLID WHITE
C - 12" SOLID WHITE
D - 18" SOLID WHITE
E - 24" SOLID WHITE
F - 6" SKIP WHITE TYP (10'- 30')
G - 6" SKIP WHITE TYP (6'- 10')
H - 6" SKIP WHITE TYP (2'- 4')
I - 6" SOLID YELLOW
J - 18" SOLID YELLOW
K - 6" DOUBLE YELLOW
L - 6" SKIP YELLOW TYP (10'- 30')
M - 6" SKIP YELLOW TYP (6'- 10')
N - 6" SKIP YELLOW TYP (2'- 4')
P - RPM BI-DIRECTIONAL AMBER/AMBER
R - FDP WHITE
S - FDP YELLOW
T - RPM BI-DIRECTIONAL WHITE/RED
U - RPM BI-DIRECTIONAL RED/YELLOW
W - RPM BI-DIRECTIONAL BLUE/BLUE

SCHNARS
ENGINEERING CORPORATION
947 Clint Moore Road
Boca Raton, Florida 33487
Certificate of Authorization #6640
Tel: (561) 241-6455
Fax: (561) 241-5182

OWNER: PULTE HOMES CORPORATION
1400 INDIAN CREEK PARKWAY
JUPITER, FLORIDA 33458

PROJECT: FIELDS AT GULFSTREAM POLO
PLAT ONE
PALM BEACH COUNTY FLORIDA

TASK: PAVEMENT MARKING & SIGNAGE PLAN

ORIGINAL: APRIL 2016
REVISIONS:
1 2 3 4 5 6 7 8 9 10 11 12

SEAL

Jeffrey T. Schnars, P.E.
Civil Engineer
Florida Registration No. 46697
FOR THE FIRM

JOB NO. 14132
DRAWN RAD
DESIGNED JTS
CHECKED JWM
Q.C. JTS
SHEET 16 OF 23

14132
RAD
JTS
JWM
JTS
6/17/2016

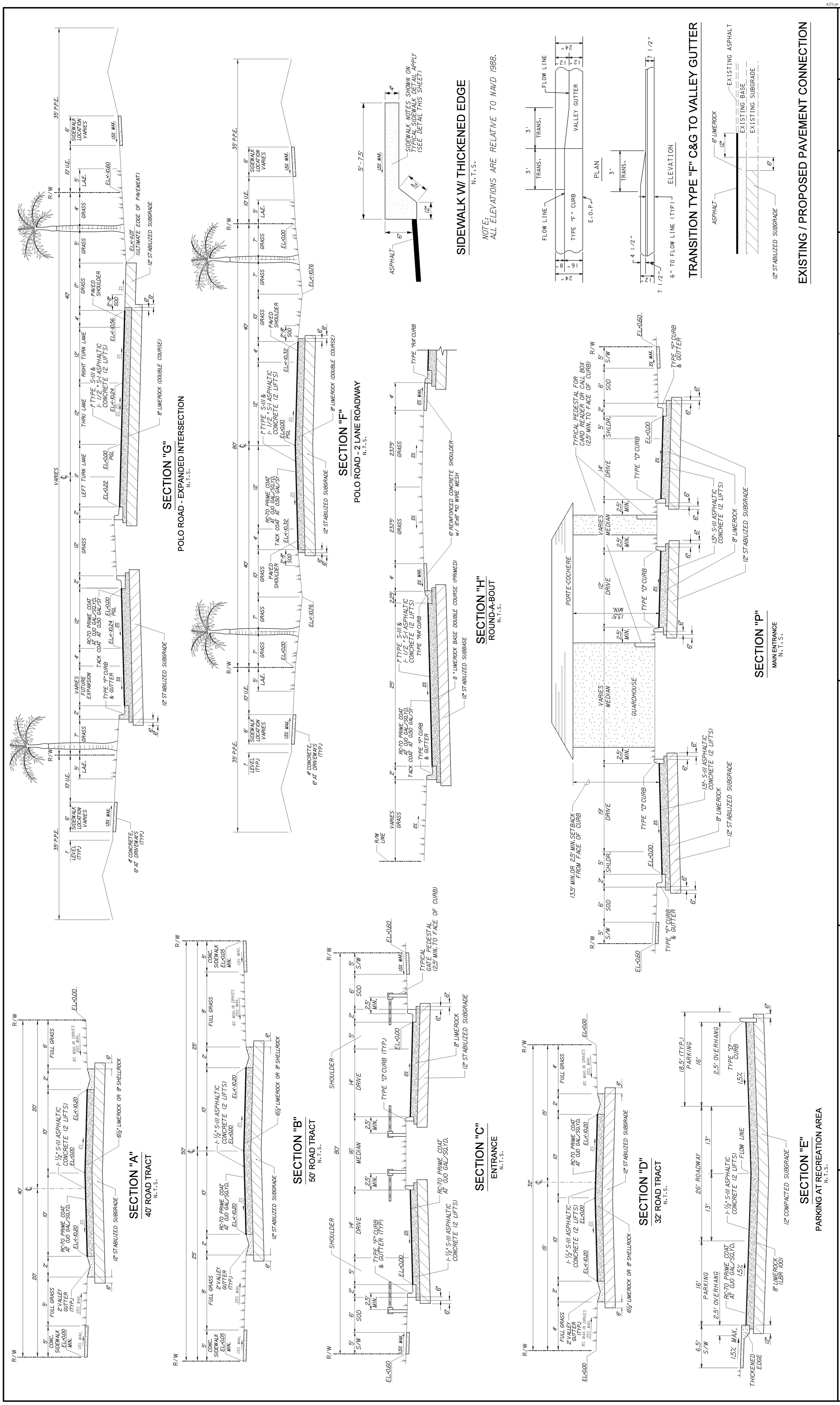
SECTION "G"
POLO ROAD - EXPANDED INTERSECTION
N.T.S.
SECTION "F"
POLO ROAD - 2 LANE ROADWAY
N.T.S.
SIDEWALK W/ THICKENED EDGE
N.T.S.
NOTE:
ALL ELEVATIONS ARE RELATIVE TO NAVD 1988.
TRANSITION TYPE "F" C&G TO VALLEY GUTTER
EXISTING / PROPOSED PAVEMENT CONNECTION
SECTION "H"
ROUND-A-BOUT
N.T.S.
SECTION "P"
MAIN ENTRANCE
N.T.S.
SECTION "A"
40' ROAD TRACT
N.T.S.
SECTION "B"
50' ROAD TRACT
N.T.S.
SECTION "C"
ENTRANCE
N.T.S.
SECTION "D"
32' ROAD TRACT
N.T.S.
SECTION "E"
PARKING AT RECREATION AREA
N.T.S.
JOB NO. 14132
DRAWN RAD
DESIGNED JTS
CHECKED JWM
Q.C. JTS
SHEET 17 OF 23
ORIGINAL: APRIL 2016
REVISIONS:
1 6/17/16 PBCLD COMMENTS
TASK:
CONSTRUCTION DETAILS
PROJECT:
FIELDS AT GULFSTREAM POLO
PLAT ONE
PALM BEACH COUNTY
FLORIDA
OWNER:
PULTE HOMES CORPORATION
1400 INDIAN CREEK PARKWAY
JUPITER, FLORIDA 33458
SCHNARS
ENGINEERING CORPORATION
947 Clint Moore Road
Boca Raton, Florida 33487
Certificate of Authorization #6640
Tel: (561) 241-6455
Fax: (561) 241-5182

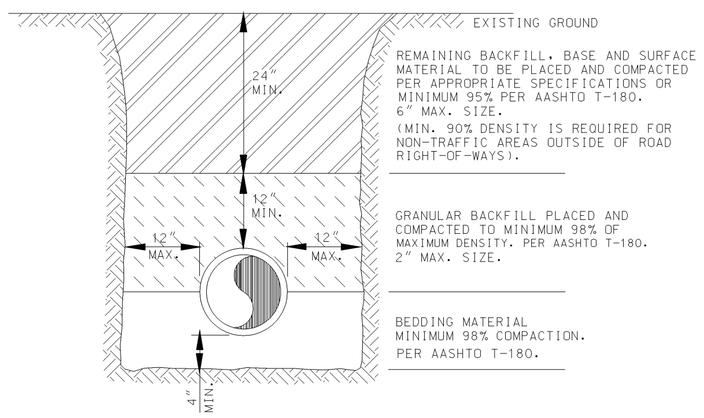

NOTES:

* 1. BEDDING SHALL CONSIST OF IN-SITU GRANULAR MATERIAL OR WASHED AND GRADED LIMEROCK 3/8"-7/8" SIZING. ONLY AT THE DIRECTION OF THE UTILITIES DIRECTOR. UNSUITABLE IN-SITU MATERIALS SUCH AS MUCK. DEBRIS AND LARGER ROCKS SHALL BE REMOVED.
2. THE PIPE SHALL BE FULLY SUPPORTED FOR ITS ENTIRE LENGTH WITH APPROPRIATE COMPACTION UNDER THE PIPE HAUNCHES.
3. THE PIPE SHALL BE PLACED IN A DRY TRENCH.
4. BACKFILL SHALL BE FREE OF UNSUITABLE MATERIAL SUCH AS LARGE ROCK. MULCH AND DEBRIS.
* 5. DENSITY TESTS ARE REQUIRED IN 1 FOOT LIFTS ABOVE THE PIPE AT INTERVALS OF 100' MAXIMUM.
6. THE DEVELOPER/CONTRACTOR SHALL COMPLY WITH ALL APPLICABLE TRENCH SAFETY LAWS AND REGULATIONS.
7. SEE SEPERATE DETAIL FOR "PAVEMENT REPLACEMENT/PIPE INSTALLATION UNDER EXISTING ROADWAY - OPEN CUT.
8. THE AFFECTED AREA SHALL BE RESTORED TO EQUAL OR BETTER CONDITION AS REQUIRED.

TYPICAL TRENCH DETAIL
(FOR DRAINAGE PIPE ALSO)

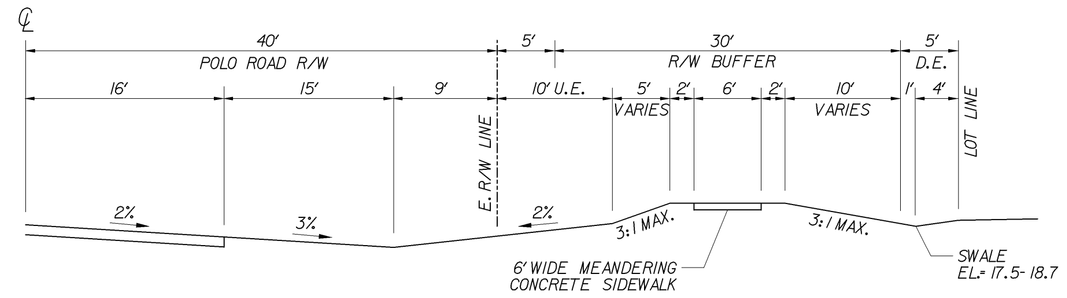

SECTION "J"
NORTH BASIN
N.T.S.

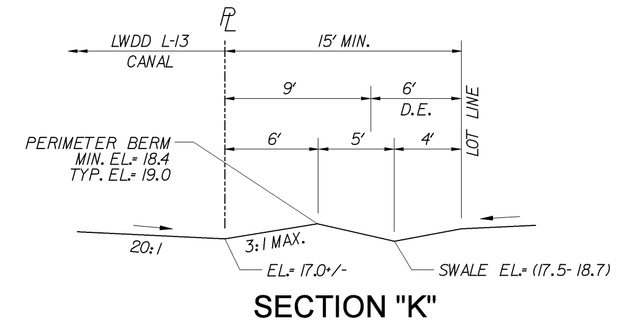

SECTION "K"
NORTH BASIN
N.T.S.

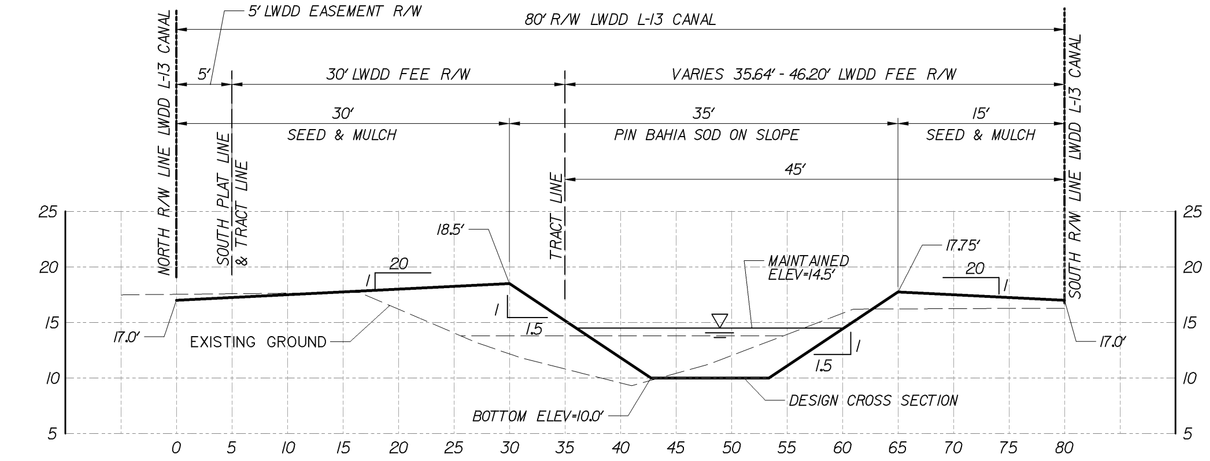

NOTES:
1. ELEVATIONS BASED ON THE NORTH AMERICAN VERTICAL DATUM OF 1988 (NAVD 1988).
2. THIS CANAL DESIGN SECTION IS FOR INSPECTION PURPOSES ONLY.IT MAY NOT DEPICT ALL OF LAKE WORTH DRAINAGE DISTRICT'S RIGHT-OF-WAY INTERESTS.
3. THE PERMITTEE WILL COORDINATE WITH THE LAKE WORTH DRAINAGE DISTRICT'S ENGINEERING DEPARTMENT PRIOR TO WORKING WITHIN THE LAKE WORTH DRAINAGE DISTRICT'S RIGHT-OF-WAY.
4. FILL MATERIAL FROM THE CANAL MAY NOT BE RELIED ON FOR SITE WORK.

L.W.D.D. L-13 CANAL
CROSS SECTION LYONS ROAD TO E-2W
LOOKING EAST
SCALE: 1" = 10' (VERT. & HORIZ)

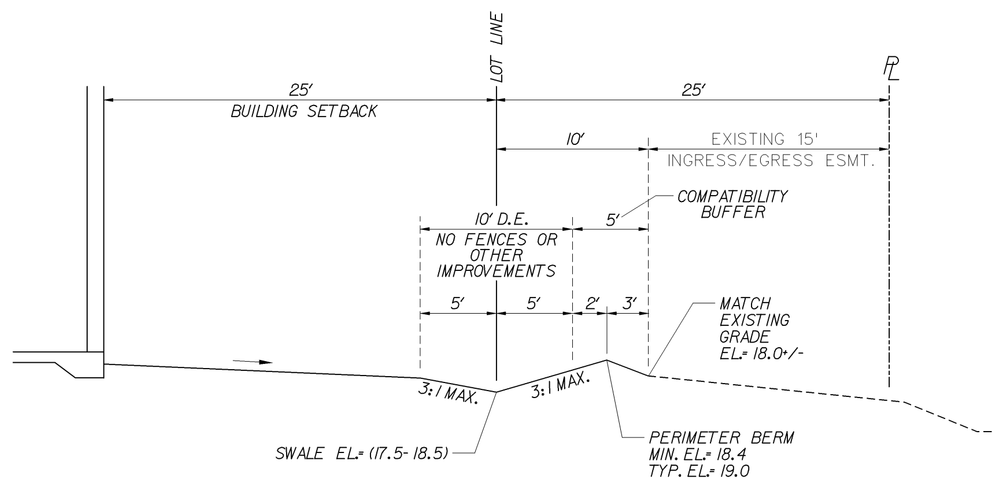

SECTION "M"
NORTH BASIN
N.T.S.

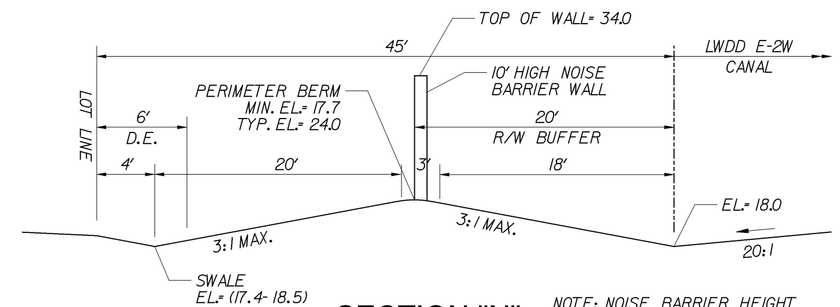

SECTION "N"
NORTH BASIN
N.T.S.

NOTE: NOISE BARRIER HEIGHT RELATIVE TO ELEV.19.0 FT.NGVD.

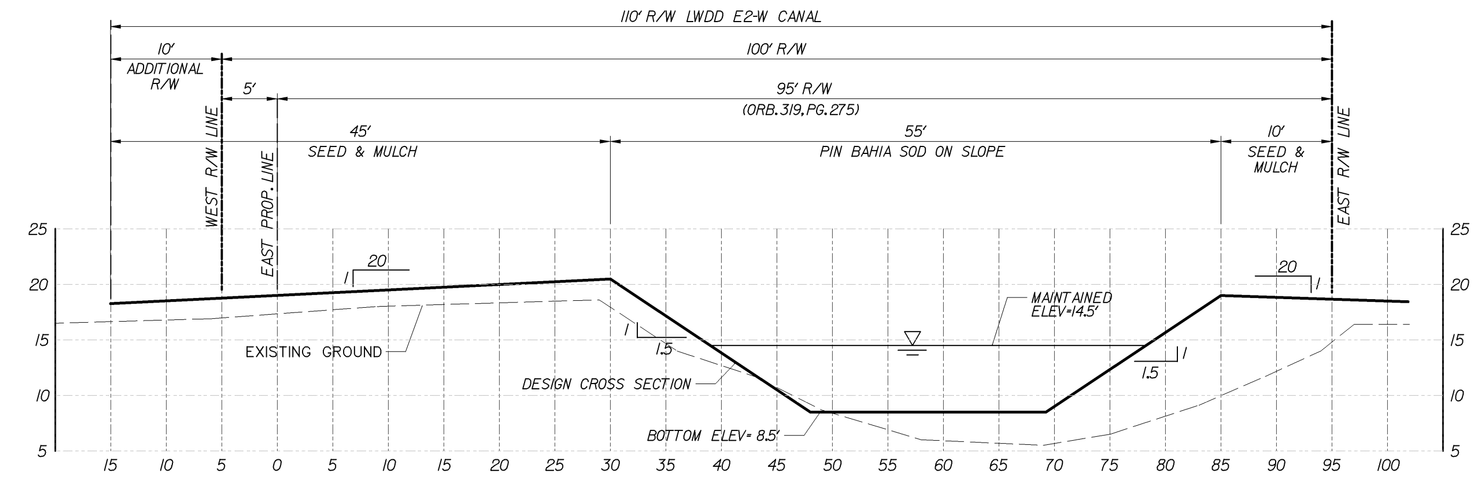

NOTES:
1. ELEVATIONS BASED ON THE NORTH AMERICAN VERTICAL DATUM OF 1988 (NAVD 1988).
2. THIS CANAL DESIGN SECTION IS FOR INSPECTION PURPOSES ONLY.IT MAY NOT DEPICT ALL OF LAKE WORTH DRAINAGE DISTRICT'S RIGHT-OF-WAY INTERESTS.
3. THE PERMITTEE WILL COORDINATE WITH THE LAKE WORTH DRAINAGE DISTRICT'S ENGINEERING DEPARTMENT PRIOR TO WORKING WITHIN THE LAKE WORTH DRAINAGE DISTRICT'S RIGHT-OF-WAY.
4. FILL MATERIAL FROM THE CANAL MAY NOT BE RELIED ON FOR SITE WORK.

L.W.D.D. E2-W CANAL
CROSS SECTION LAKE WORTH ROAD TO L-14
LOOKING NORTH
SCALE: 1" = 10' (VERT. & HORIZ)

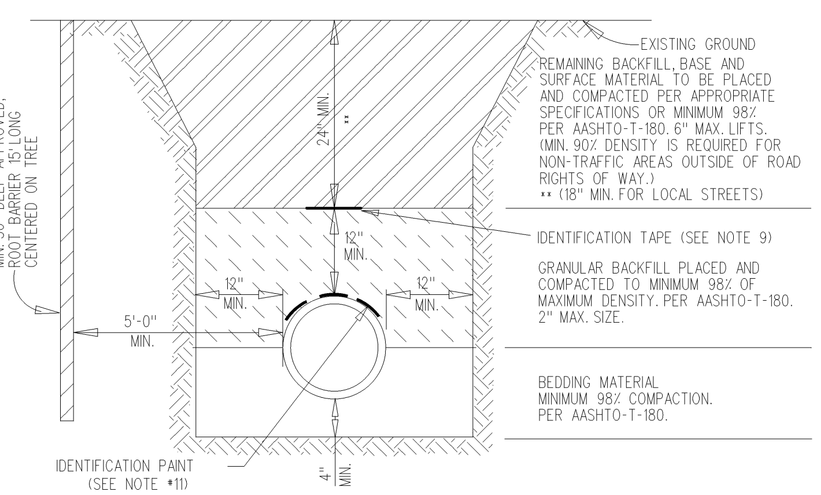

NOTES :

1. BEDDING SHALL CONSIST OF IN-SITU GRANULAR MATERIAL OR WASHED AND GRADED LIMEROCK 3/8" -7/8" SIZING WITH EQUAL OR GREATER STRUCTURAL ADEQUACY AS EXISTING. UNSUITABLE IN-SITU MATERIALS SUCH AS MUCK, DEBRIS AND LARGER ROCKS SHALL BE REMOVED.
2. THE PIPE SHALL BE FULLY SUPPORTED FOR ITS ENTIRE LENGTH WITH APPROPRIATE COMPACTION UNDER THE PIPE HAUNCHES.
3. THE PIPE SHALL BE PLACED IN A DRY TRENCH.
4. BACKFILL SHALL BE FREE OF UNSUITABLE MATERIAL SUCH AS LARGE ROCK, MUCK AND DEBRIS.
5. DENSITY TESTS SHALL BE TAKEN IN 1FT LIFTS ABOVE THE PIPE AT INTERVALS OF 400 FT MAXIMUM (1 SET MINIMUM) OR AS DIRECTED BY THE CONSTRUCTION COORDINATION DIVISION. RESULTS SHALL BE SUBMITTED TO CONSTRUCTION COORDINATION DIVISION AS PART OF THEIR FIELD REVIEW.
6. THE PERMITTEE/DEVELOPER/CONTRACTOR SHALL BE RESPONSIBLE TO COMPLY WITH ALL TRENCH SAFETY LAWS AND REGULATIONS.
7. SEE SEPARATE DETAIL FOR PAVED AREAS (OPEN CUT FOR THOROUGHFARE AND NON-THOROUGHFARE ROADS).
8. THE AFFECTED AREA SHALL BE RESTORED TO EQUAL OR BETTER CONDITION OR AS SPECIFIED IN PERMIT/CONTRACT DOCUMENTS.
* 9. APPROVED MAGNETIC TAPE IS REQUIRED FOR ALL MAIN PRESSURE PIPES AND CONDUIT IN THE COUNTY'S RIGHT-OF-WAY. INSTALL TAPE 24" BELOW FINISHED GRADE.
10. ROOT BARRIER IS REQUIRED FOR APPROVED PIPE INSTALLATION CLOSER THAN 10 FEET FROM AN EXISTING TREE.
11. CONTINUOUS 4" WIDE PAINT STRIPING IS REQUIRED FOR DIP/PCCP WATER MAINS (BLUE), DIP SANITARY FORCE MAINS (GREEN). DIP RECLAIMED WATER MAINS (PURPLE), GAS MAINS (YELLOW), OR AS REQUIRED BY THE APWA.
12. PERMANENT ABOVE GROUND UTILITY MARKER SHALL BE INSTALLED IF REQUIRED BY PROPERTY OWNER GRANTING THE PIPE INSTALLATION PERMIT.

TYPICAL TRENCH DETAIL WITH ROOT BARRIER INSTALLATION DETAIL
NON-PAVED AREAS

CONSTRUCTION PROCEDURES:

THE BACKFILL FOR THE FIRST AND SECOND STAGES SHALL BE PLACED IN 6" LAYERS (COMPACTED THICKNESS) AND SHALL BE COMPACTED TO 100% OF MAXIMUM DENSITY AS DETERMINED BY AASHTO T-99.

STAGE 1:

THE CONTRACTOR SHALL PROVIDE ADEQUATE COMPACTED FILL BENEATH THE HAUNCHES OF THE PIPE USING MECHANICAL TAMPS SUITABLE FOR THIS PURPOSE. THIS COMPACTION APPLIES TO THE MATERIAL PLACED BENEATH THE HAUNCHES OF THE PIPE AND ABOVE ANY BEDDING REQUIRED.

STAGE 2:

THE CONTRACTOR SHALL OBTAIN A WELL-COMPACTED BED AND FILL ALONG THE SIDES OF THE PIPE AND TO A POINT INDICATING THE TOP OF SUB-GRADE MATERIAL.

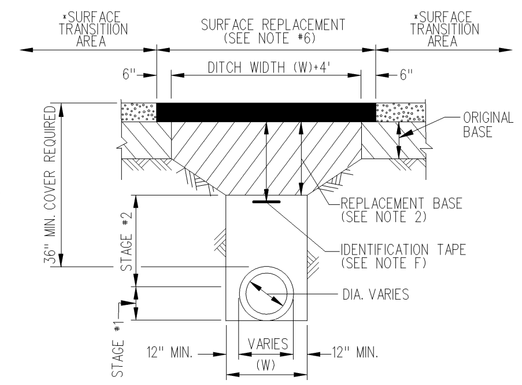

REPLACEMENT OF FLEXIBLE PAVEMENT FOR PERMITTED PAVEMENT CUT

CONSTRUCTION NOTES:

1. BEDDING SHALL CONSIST OF IN-SITU GRANULAR MATERIAL OR WASHED AND GRADED LIMEROCK 3/8" -7/8" SIZING WITH EQUAL OR GREATER STRUCTURAL ADEQUACY AS EXISTING. UNSUITABLE IN-SITU MATERIALS SUCH AS MUCK, DEBRIS AND LARGER ROCKS SHALL BE REMOVED.
2. REPLACED BASE MATERIAL OVER DITCH SHALL BE 16" MINIMUM FOR THOROUGHFARE PLAN ROADS.
3. ASPHALT CONCRETE PAVEMENT JOINTS SHALL BE MECHANICALLY SAWED AND BUTT-JOINTED.
4. BASE MATERIAL (PER ROADWAY PRODUCTION DESIGN STANDARDS) SHALL BE PLACED IN TWO OR THREE LAYERS (6" MAX. PER LAYER) AND EACH LAYER THOROUGHLY ROLLED OR TAMPED TO THE SPECIFIED DENSITY.
5. * SURFACE TRANSITION AREA (SEE PLANS FOR LOCATION). OVERLAY OR MILL / RESURFACE FOR A DISTANCE OF 50' ON BOTH SIDES OF THE OPEN CUT AND FOR A FULL LANE WIDTH.
6. 1" SII ASPHALTIC CONCRETE OVER 1½" SI ASPHALTIC CONCRETE WITH RC-70 PRIME COAT AT 0.10 GAL/SQ. YD.
7. PIPE SHALL BE PLACED IN A DRY TRENCH.

GENERAL NOTES:

A. ALL ROADWAY REPAIR WORK SHALL BE PERFORMED IN CONFORMANCE WITH APPLICABLE FDOT STANDARD SPECIFICATIONS FOR ROAD AND BRIDGE CONSTRUCTION AND COUNTY PPM# EL-0-3605.
B. DENSITY TESTS SHALL BE TAKEN IN 1FT LIFTS ABOVE THE PIPE AT INTERVALS OF 400 FT MAXIMUM (1 SET MINIMUM) OR AS DIRECTED BY THE CONSTRUCTION COORDINATION DIVISION. RESULTS SHALL BE SUBMITTED TO CONSTRUCTION COORDINATION DIVISION AS PART OF THEIR FIELD REVIEW.
C. ENGINEER-OF-RECORD SHALL PROVIDE FULL-TIME INSPECTION DURING THE ENTIRETY OF THE OPEN-CUT OPERATION, BEGINNING WITH THE EXCAVATION AND CONTINUING THROUGH THE COMPLETION OF THE PAVING.
D. IF THE PAVEMENT IS NOT COMPLETELY RESTORED IMMEDIATELY FOLLOWING THE OPEN CUT, A SMOOTH TEMPORARY PATCH (MINIMUM 1.25" ASPHALT) SHALL BE INSTALLED, PROPERLY MATCHING THE EXISTING GRADING OF THE ROADWAY. THE TEMPORARY PATCH SHALL BE ALLOWED TO REMAIN IN PLACE AND BE MAINTAINED FOR A PERIOD NO LONGER THAN 45 DAYS. THE COUNTY RETAINS THE RIGHT TO USE POSTED SURETY TO COMPLETE ANY RESTORATION WORK THAT HAS NOT BEEN COMPLETED IN THE 45 DAYS PERIOD. ALTERNATIVE TEMPORARY TRENCH PROTECTION (STEEL PLATES OR OTHERS) MAY BE APPROVED BY THE CONSTRUCTION COORDINATION DIVISION.
E. FOR THE FINAL RESTORATION, THE ROAD SHALL BE MILLED/RESURFACED FOR A FULL LANE WIDTH OF THE TRAVEL LANES ENCROACHED BY THE TRENCH AREA, INCLUDING A TRANSITION AREA OF 50 FT ON EACH SIDE OF THE TRENCH. THE PAVEMENT SHALL BE MILLED AND RESURFACED PER CONSTRUCTION NOTE 6.
F. APPROVED MAGNETIC TAPE IS REQUIRED FOR ALL MAIN PRESSURE PIPES AND CONDUIT IN THE COUNTY'S RIGHT-OF-WAY. INSTALL TAPE 24" BELOW FINISHED GRADE.
G. CONTINUOUS 4" WIDE PAINT STRIPING IS REQUIRED FOR DIP/PCCP WATER MAINS (BLUE), DIP SANITARY FORCE MAINS (GREEN), DIP RECLAIMED WATER MAINS (PURPLE), GAS MAINS (YELLOW), OR AS REQUIRED BY THE APWA.

OPEN CUT DETAIL FOR THOROUGHFARE ROADS (PAVED AREAS)

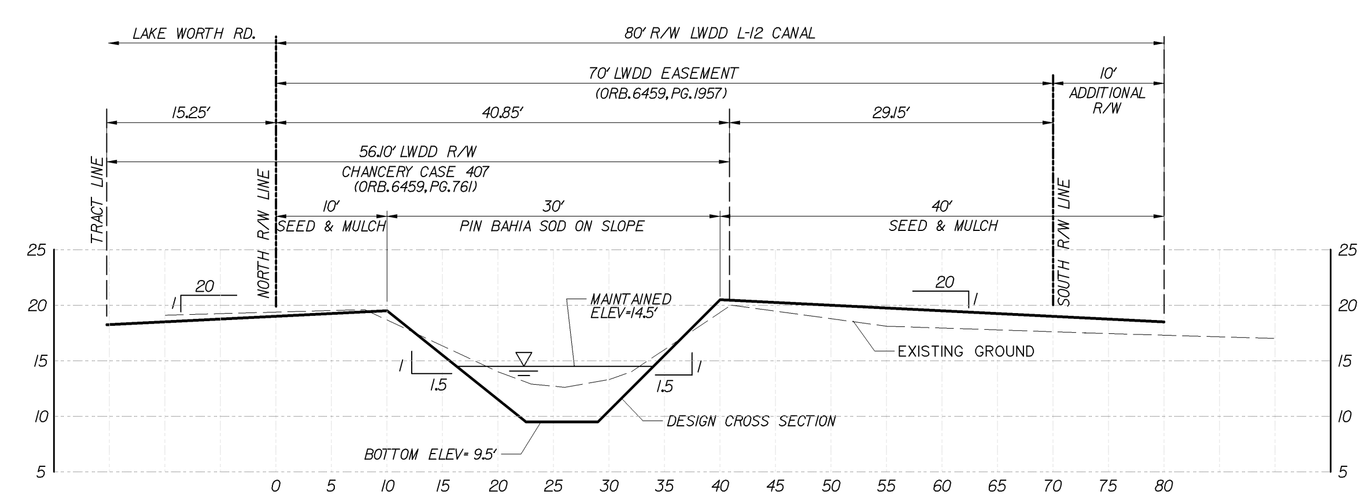

NOTES:
1. ELEVATIONS BASED ON THE NORTH AMERICAN VERTICAL DATUM OF 1988 (NAVD 1988).
2. THIS CANAL DESIGN SECTION IS FOR INSPECTION PURPOSES ONLY.IT MAY NOT DEPICT ALL OF LAKE WORTH DRAINAGE DISTRICT'S RIGHT-OF-WAY INTERESTS.
3. THE PERMITTEE WILL COORDINATE WITH THE LAKE WORTH DRAINAGE DISTRICT'S ENGINEERING DEPARTMENT PRIOR TO WORKING WITHIN THE LAKE WORTH DRAINAGE DISTRICT'S RIGHT-OF-WAY.
4. FILL MATERIAL FROM THE CANAL MAY NOT BE RELIED ON FOR SITE WORK.

L.W.D.D. L-12 CANAL
CROSS SECTION E-1 TO E-2W
LOOKING EAST
SCALE: 1" = 10' (VERT. & HORIZ)

SCHNARS
ENGINEERING CORPORATION
947 Clint Moore Road
Boca Raton, Florida 33487
Certificate of Authorization #6640
Tel: (561) 241-6455
Fax: (561) 241-5182

OWNER: PULTE HOMES CORPORATION
1400 INDIAN CREEK PARKWAY
JUPITER, FLORIDA 33458

PROJECT: FIELDS AT GULFSTREAM POLO
PLAT ONE
PALM BEACH COUNTY FLORIDA

TASK: CONSTRUCTION DETAILS

ORIGINAL: APRIL 2016
REVISIONS:
1 6/17/16 PBC TC COMMENTS
2
3
4
5
6
7
8
9
10
11
12

SEAL

Jeffrey T. Schnars, P.E.
Civil Engineer
Florida Registration No. 46697
(FOR THE FIRM)

JOB NO. 14132
DRAWN RAD
DESIGNED JTS
CHECKED JWM
Q.C. JTS
SHEET 18 OF 23

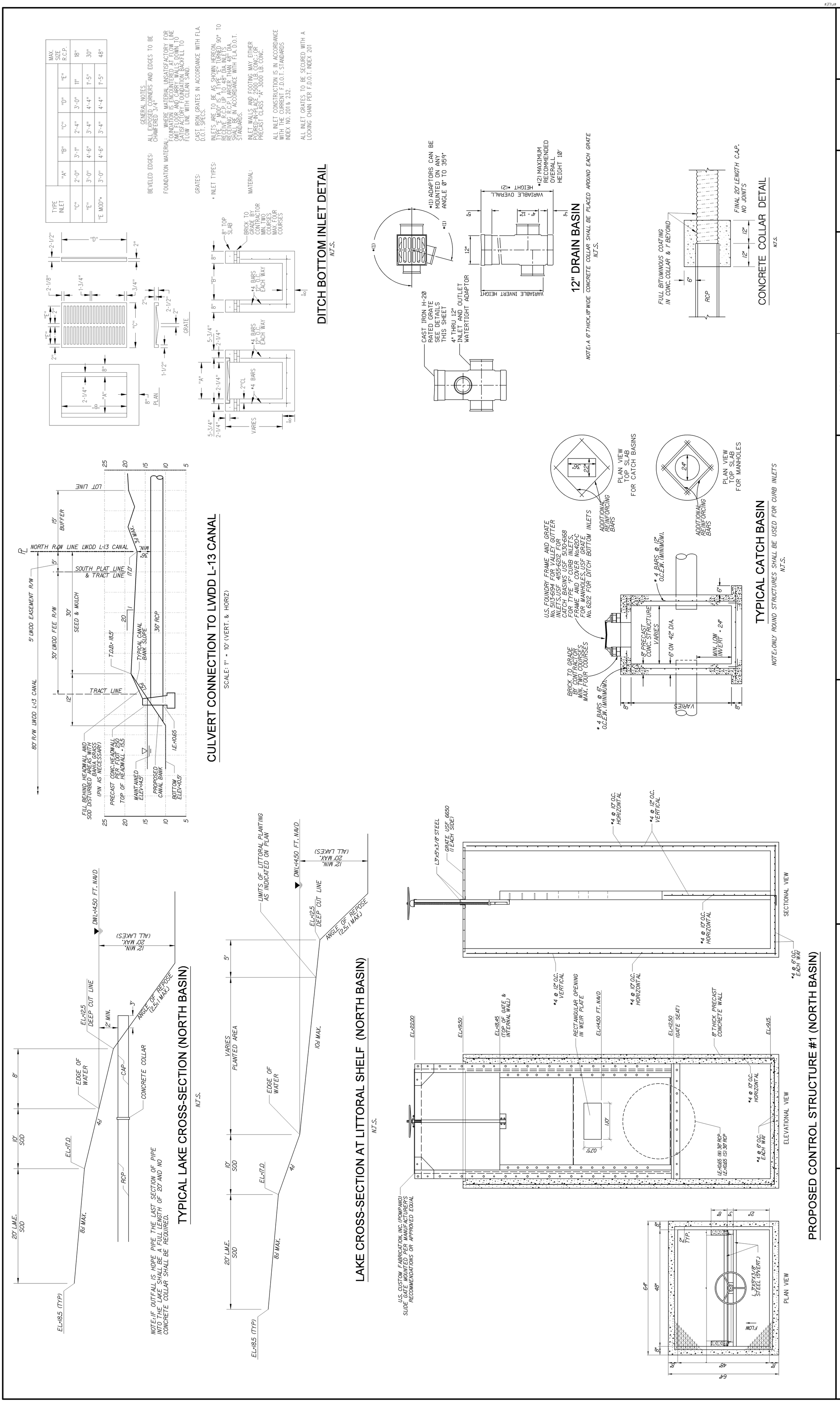
DITCH BOTTOM INLET DETAIL
N.T.S.
12" DRAIN BASIN
NOTE: A 6" THICK, 18" WIDE CONCRETE COLLAR SHALL BE PLACED AROUND EACH GRATE
N.T.S.
CONCRETE COLLAR DETAIL
N.T.S.
CULVERT CONNECTION TO LWDD L-13 CANAL
SCALE: 1" = 10' (VERT. & HORIZ)
TYPICAL CATCH BASIN
NOTE: ONLY ROUND STRUCTURES SHALL BE USED FOR CURB INLETS
N.T.S.
TYPICAL LAKE CROSS-SECTION (NORTH BASIN)
N.T.S.
NOTE: IF OUTFALL IS HDPE PIPE THE LAST SECTION OF PIPE INTO THE LAKE SHALL BE A FULL LENGTH OF 20' AND NO CONCRETE COLLAR SHALL BE REQUIRED.
LAKE CROSS-SECTION AT LITTORAL SHELF (NORTH BASIN)
N.T.S.
PROPOSED CONTROL STRUCTURE #1 (NORTH BASIN)
ELEVATIONAL VIEW
SECTIONAL VIEW
PLAN VIEW
U.S. CUSTOM FABRICATION, INC. (POMPANO) SLIDE GATE MOUNTED PER MANUFACTURER'S RECOMMENDATIONS OR APPROVED EQUAL
ORIGINAL: APRIL 2016
REVISIONS:
1 6/17/16 PBCLD COMMENTS
JOB NO. 14132
DRAWN RAD
DESIGNED JTS
CHECKED JWM
Q.C. JTS
SHEET 19 OF 23
TASK:
CONSTRUCTION DETAILS
PROJECT:
FIELDS AT GULFSTREAM POLO
PLAT ONE
PALM BEACH COUNTY
FLORIDA
OWNER:
PULTE HOMES CORPORATION
1400 INDIAN CREEK PARKWAY
JUPITER, FLORIDA 33458
SCHNARS
ENGINEERING CORPORATION
947 Clint Moore Road
Boca Raton, Florida 33487
Certificate of Authorization #6640
Tel: (561) 241-6455
Fax: (561) 241-5182

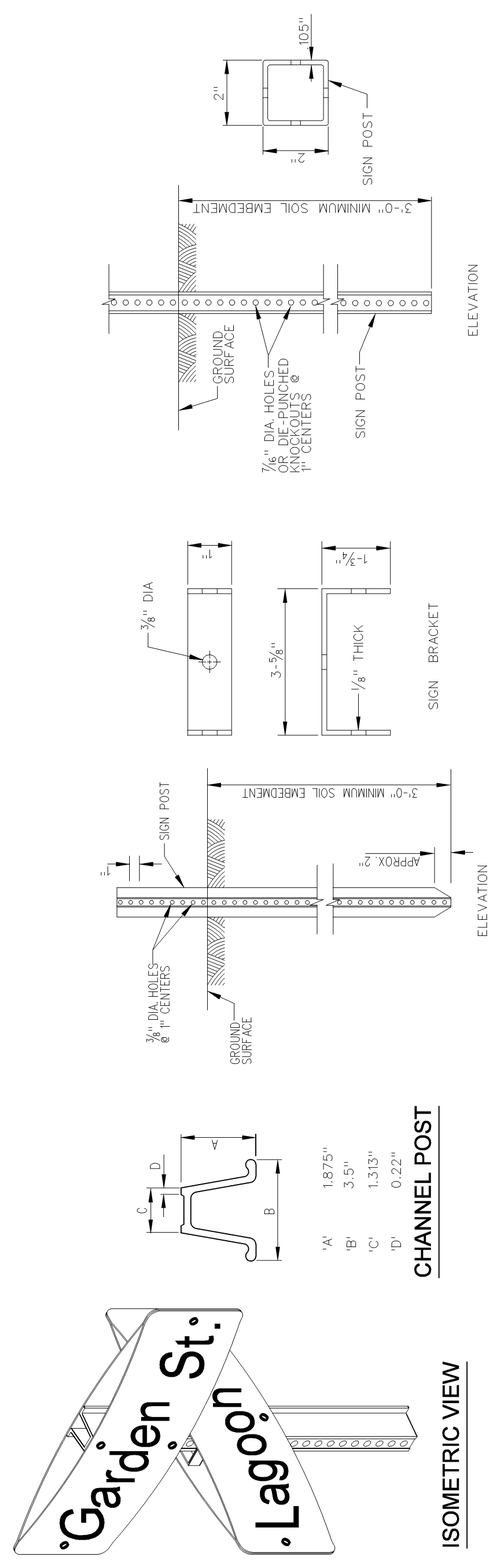

ISOMETRIC VIEW

CHANNEL POST

STEEL FLANGED CHANNEL POST DETAILS

STEEL SQUARE TUBE POST DETAILS

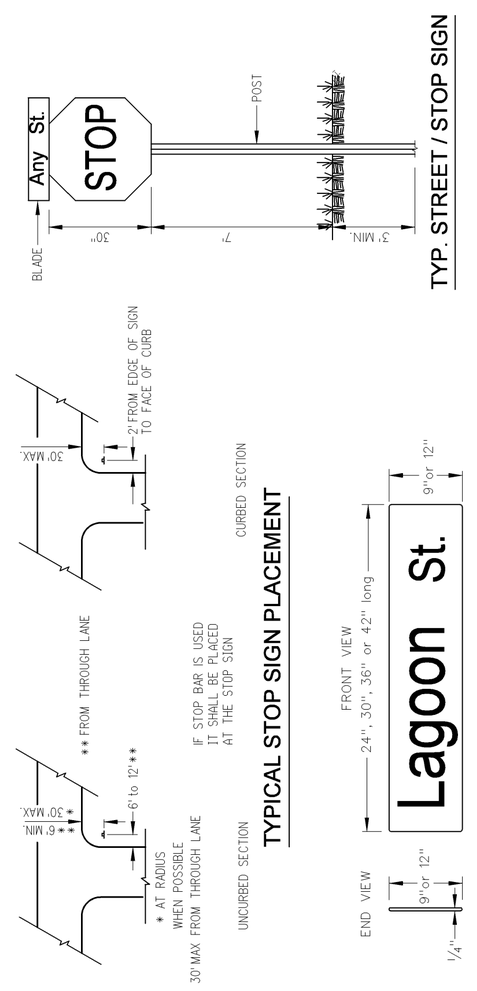

TYP. STREET / STOP SIGN

TYPICAL STOP SIGN PLACEMENT

STREET NAME SIGN
(SNS) or (D-3)

GENERAL SPECIFICATIONS:

FLAT BLADE: ALCOA #86054 6063-T6 ALLOY, ETCHED, DEGREASED WITH #1200 ALODINE FINISH WITH #3877 GREEN HIGH INTENSITY BACKGROUND AND EQUAL DIMENSIONS-9" & 12" MIN. H, 24",30",36" & 42" L.

LETTERS: NAME-6" UPPERCASE WITH 4.5" LOWERCASE & 9" UPPERCASE WITH 6.75" LOWERCASE, SERIES "B" #3870 HIGH INTENSITY (SILVER) - SUFFIX - 4.5".

POST: STEEL FLANGED CHANNEL POST 3 LBS. WEIGHT PER FOOT WITH BAKED GREEN ALK'D OR GALVANIZED FINISH PER A.S.T.M.-A-123 WITHOUT ANCHOR PLATES. SQUARE POST PER FDOT INDEX 11860.

BRACKETS SHALL BE ATTACHED FIRMLY ON STANDARD SQUARE TUBE OR U-CHANNEL POSTS BY MEANS OF (2) 5/16" DIAMETER HEX HEAD BOLTS.

STOP SIGN: R1-1 MUTCD - (HIGH INTENSITY)

LOCATION: ONE PER INTERSECTION AS INDICATED ON THE PLANS.

POLICY: 9" BLADES WITH 6" UPPERCASE WITH 4.5" LOWERCASE LETTERS FOR TWO LANE ROADS WITH A SPEED LIMIT UNDER 45 MPH.

12" BLADES WITH 9" UPPERCASE WITH 6.75" LOWERCASE LETTERS FOR:
-THOROUGHFARE ROADS FOUR LANES OR WIDER.
-TWO LANE ROADS WITH A POSTED SPEED LIMIT OF 45 MPH OR MORE.
ONLY ONE BLADE WILL BE USED INDICATING THE SIDE STREET NAME.

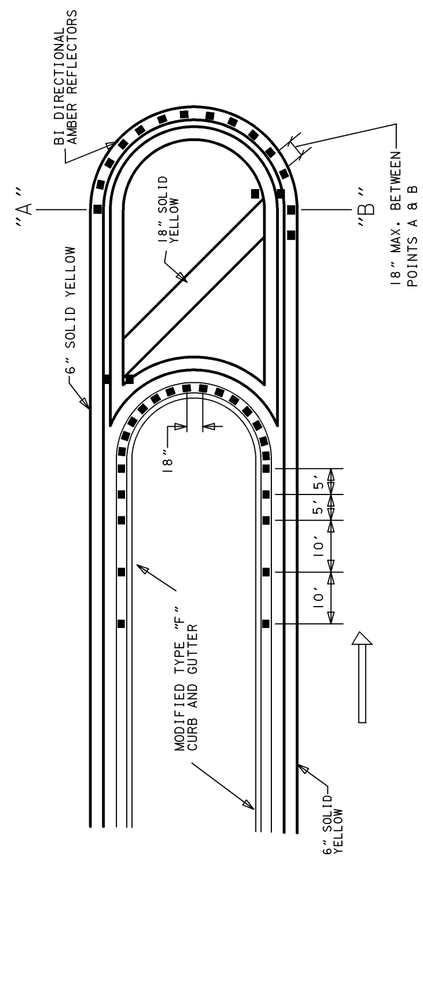

TYPICAL PAVEMENT MARKING FOR CROSS HATCHED

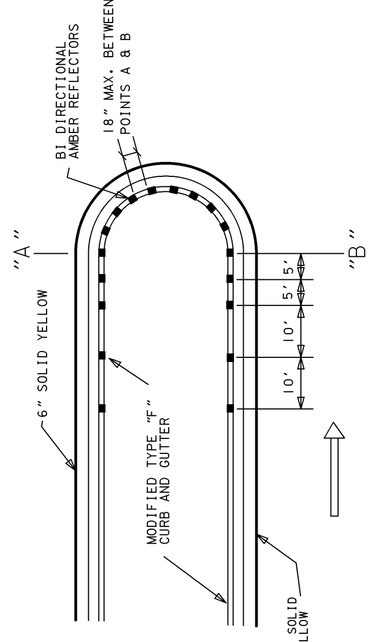

1. ALL REFLECTIVE PAVEMENT MARKERS SHALL BE APPROVED BY PALM BEACH COUNTY TRAFFIC ENGINEERING BEFORE INSTALLATION.
2. ⇧ SHOWS TRAFFIC FLOW NOT A PAVEMENT MARKING
3. REFLECTORS SHALL BE EQUALLY SPACED BETWEEN POINT'S "A" AND "B" BUT NO MORE THAN 18" APART
4. EPOXY SHALL BE USED WHEN INSTALLING R.P.M.'S ON CONCRETE

TYPICAL PAVEMENT MARKING FOR RAISED MEDIAN

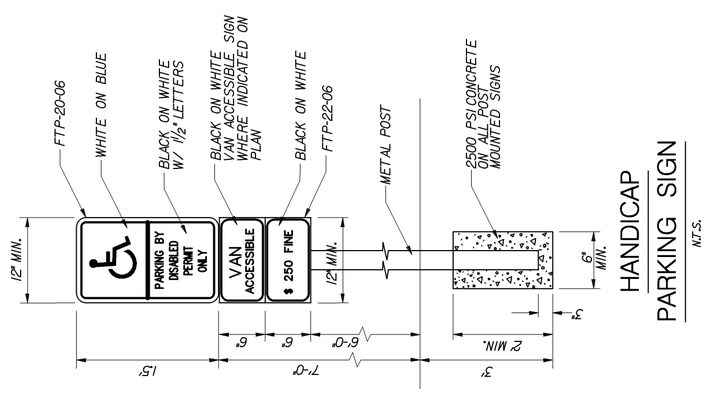

HANDICAP PARKING SIGN
N.T.S.

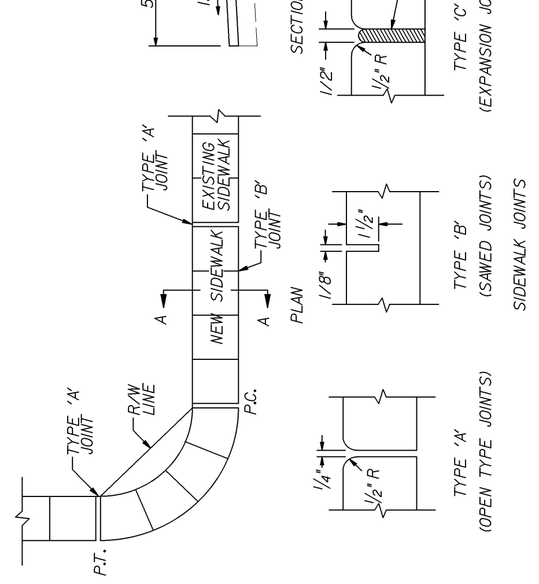

TABLE OF SIDEWALK JOINTS	
TYPE	LOCATION
'A'	P.C. AND P.T. OF CURVES, JUNCTION OF EXISTING AND NEW SIDEWALKS
'B'	5'-0" CENTER TO CENTER ON SIDEWALKS
'C'	*WHERE SIDEWALK ABUTS CONCRETE CURBS, DRIVEWAYS, AND SIMILAR STRUCTURES

* AT THE DISCRETION OF THE ENGINEER

TABLE OF SIDEWALK THICKNESS - 'T'	
LOCATION	'T'
RESIDENTIAL AREAS & CART PATHS	4"
AT DRIVEWAYS AND OTHER AREAS	6"

NOTES:

1. SUBGRADE TO BE A MINIMUM 4" OF CLEAN SAND OR SANDY LOAM COMPACTED TO 95% DENSITY AASHTO T-99.
2. SIDEWALKS TO BE PORTLAND CEMENT CONCRETE, MIN. 2500 PSI @ 28 DAYS.
3. AT DRIVEWAY LOCATIONS, SIDEWALKS SHALL BE 6" THICK AND SHALL INCLUDE 6X6, W1.4XW1.4 WELDED WIDE MESH WITH 2" OR LOWER FROM THE BOTTOM AND END.
4. SIDEWALK SLOPES SHALL MEET THE REQUIREMENTS OF THE AMERICANS DISABILITIES ACT. SIDEWALKS SHALL HAVE A MAXIMUM TRANSVERSE SLOPE OF 0.02 FEET PER FOOT AND A MINIMUM TRANSVERSE SLOPE OF 0.01 FEET PER FOOT TOWARD THE SWALE OR GUTTER AND SHALL BE GIVEN A TRANSVERSE HAIR BROOM FINISH.
5. RAMPS SHALL BE PROVIDED AT ALL INTERSECTIONS IN ACCORDANCE WITH FDOT INDEX 304.

SIDEWALK & CART PATH DETAIL
N.T.S.

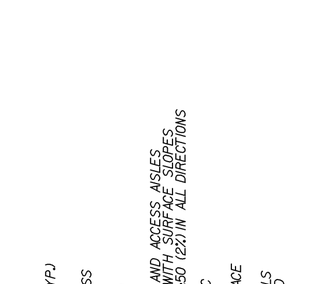

SYMBOL SHALL BE PAINTED WITH WHITE PAINT AND TO THE DIMENSIONS SHOWN

HANDICAP SYMBOL
PAINT DETAIL
N.T.S.

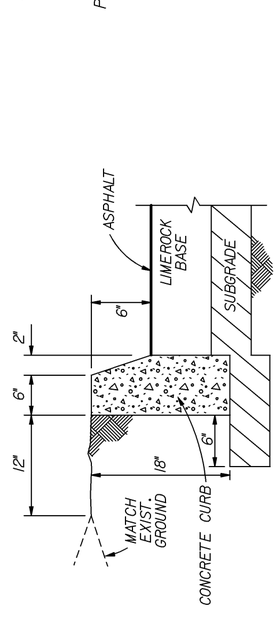

TYPE 'D' CURB
N.T.S.

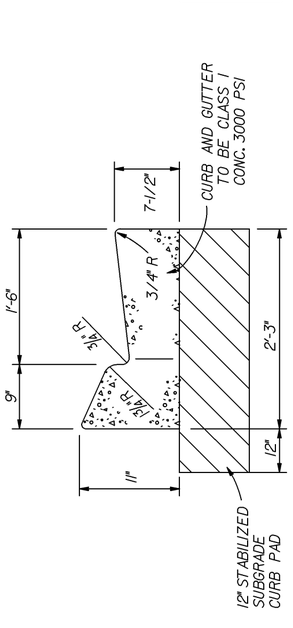

TYPE 'E' CURB
N.T.S.

NOTE: WHEN USED ON HIGH SIDE OF ROADWAY, THE CROSS SLOPE OF THE GUTTER SHALL MATCH THE CROSS SLOPE OF THE ADJACENT PAVEMENT AND THE THICKNESS OF THE LIP SHALL BE 6", UNLESS OTHERWISE SHOWN ON THE PLANS.

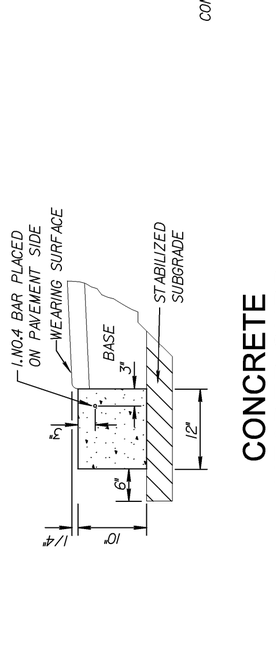

CONCRETE HEADER CURB
N.T.S.

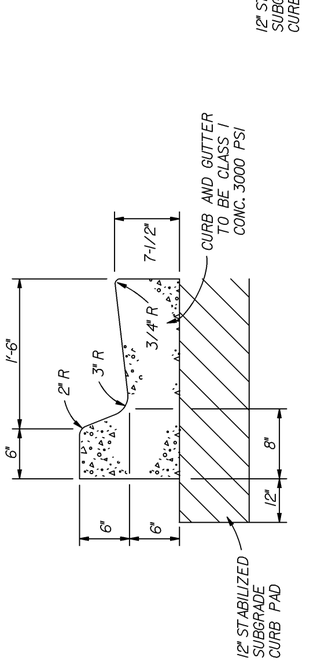

TYPE 'F' CURB AND GUTTER
N.T.S.

NOTE: WHEN USED ON HIGH SIDE OF ROADWAY, THE CROSS SLOPE OF THE GUTTER SHALL MATCH THE CROSS SLOPE OF THE ADJACENT PAVEMENT AND THE THICKNESS OF THE LIP SHALL BE 6", UNLESS OTHERWISE SHOWN ON THE PLANS.

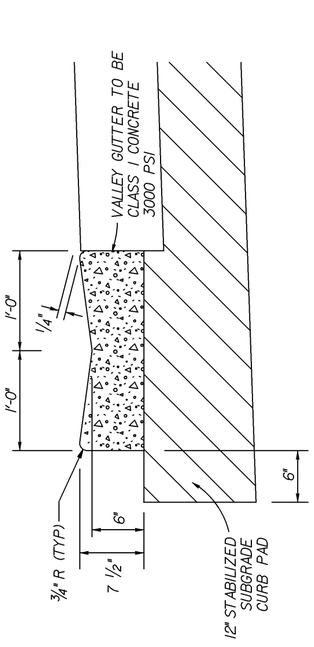

2' VALLEY GUTTER
N.T.S.

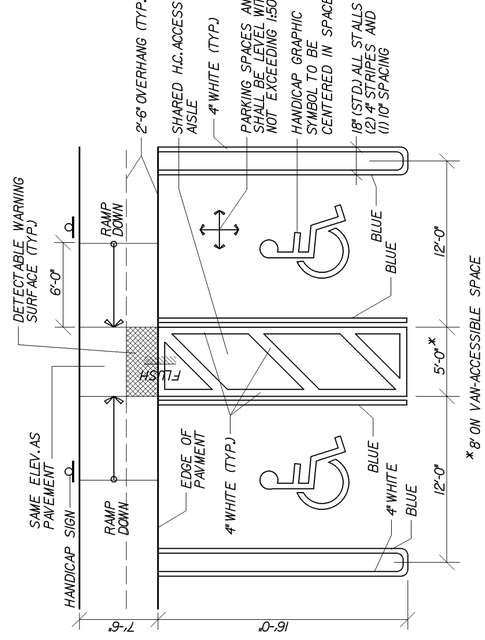

HANDICAP PARKING DETAIL
N.T.S.

NOTES:
1. PAINT SHALL BE APPLIED AT A RATE THICK ENOUGH TO PROVIDE SOLID WHITE/BLUE/BLACK LINES WITH NO LIGHT SPOTS OR PAINT SKIPS (15 MILS MIN.)

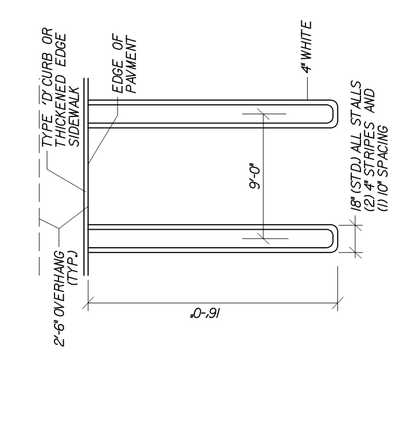

TYPICAL PARKING SPACE DETAIL
N.T.S.

TYPICAL PAVEMENT MARKING FOR RAISED MEDIAN

JOB NO. 14132
DRAWN RAD
DESIGNED JTS
CHECKED JWM
Q.C. JTS
SHEET 20 OF 23

Jeffrey T. Schnars, P.E.
Civil Engineer
Florida Registration No. 46697
(FOR THE FIRM)

SEAL

ORIGINAL: APRIL 2016
REVISIONS:
1 ____ 6 ____
2 ____ 7 ____
3 ____ 8 ____
4 ____ 9 ____
5 ____ 10 ____
11 ____
12 ____

TASK:

PROJECT:

CONSTRUCTION DETAILS

OWNER:

PULTE HOMES CORPORATION
1400 INDIAN CREEK PARKWAY
JUPITER, FLORIDA 33458

FIELDS AT GULFSTREAM POLO
PLAT ONE
PALM BEACH COUNTY FLORIDA

SCHNARS
ENGINEERING CORPORATION
947 Clint Moore Road
Boca Raton, Florida 33487
Certificate of Authorization #6640
Tel: (561) 241-6455
Fax: (561) 241-5182

6/17/2016 5:37:01 PM $FILE$

PAVING, GRADING AND DRAINAGE NOTES

1. ALL UNSUITABLE MATERIALS, SUCH AS MUCK, HARDPAN, ORGANIC MATERIAL AND OTHER DELETERIOUS MATERIAL AS CLASSIFIED BY AASHTO M-145, FOUND WITHIN THE BUILDING PAD, ROAD AND PARKING LOT AREAS SHALL BE REMOVED DOWN TO ROCK OR SUITABLE MATERIAL, AND REPLACED WITH THE SPECIFIED FILL MATERIAL IN MAXIMUM 18" LIFTS THOROUGHLY AND UNIFORMLY COMPACTED TO ACHIEVE 95 PERCENT OF THE ASTM D1557 MAXIMUM DRY DENSITY.

2. ALL AREAS SHALL BE CLEARED AND GRUBBED PRIOR TO CONSTRUCTION. THIS SHALL CONSIST OF THE COMPLETE REMOVAL AND DISPOSAL OF ALL TREES, BRUSH, STUMPS, ROOTS, GRASS, WEEDS, RUBBISH AND ALL OTHER OBSTRUCTION RESTING ON OR PROTRUDING THROUGH THE SURFACE OF THE EXISTING GROUND TO A DEPTH OF 1 FOOT. ITEMS DESIGNATED TO REMAIN OR TO BE RELOCATED OR TO BE ADJUSTED SHALL BE SO DESIGNATED ON THE DRAWINGS.

3. FILL MATERIAL SHALL BE CLASSIFIED AS A-1, A-3, or A-2-4 IN ACCORDANCE WITH AASHTO M-145 AND SHALL BE FREE FROM VEGETATION AND ORGANIC MATERIAL. FILL MATERIAL SHOULD HAVE NOT MORE THAN 8% BY WEIGHT PASSING THE NO. 200 SIEVE AND SHALL HAVE NO PARTICLE SIZE LARGER THAN 3". CARE SHOULD BE EXERCISED WHEN PLACING MATERIALS WHICH EXCEED 3" TO ASSURE THAT NESTING DOES NOT OCCUR AND TO FURTHER ASSURE THAT THE +3" PARTICLES ARE FULLY SURROUNDED BY FINER GRAINED MATERIAL.

4. THE CONTRACTOR SHALL BE RESPONSIBLE FOR PROVIDING CERTIFIED MATERIAL TEST RESULTS TO THE ENGINEER OF RECORD PRIOR TO THE RELEASE OF FINAL CERTIFICATION BY THE ENGINEER. TEST RESULTS MUST INCLUDE, BUT MAY NOT BE LIMITED TO, DENSITIES FOR SUBGRADE AND LIMEROCK, UTILITIES, EXCAVATION, ASPHALT GRADATION REPORTS, CONCRETE CYLINDERS, ETC.

5. ALL INLETS AND PIPE SHALL BE PROTECTED DURING CONSTRUCTION TO PREVENT SILTATION IN THE DRAINAGE SYSTEMS BY WAY OF TEMPORARY PLUGS, PLYWOOD COVERS OR FILTER FABRIC OVER THE INLETS AND HAY BALES AROUND INLETS.THE ENTIRE DRAINAGE SYSTEM SHALL BE CLEANED OF ALL DEBRIS PRIOR TO FINAL ACCEPTANCE.

6. WHERE NEW ASPHALT MEETS EXISTING ASPHALT, THE EXISTING ASPHALT SHALL BE SAWCUT TO PROVIDE A STRAIGHT EVEN LINE. PRIOR TO REMOVING CURB OR GUTTER, THE ADJACENT ASPHALT SHALL BE SAWCUT TO PROVIDE A STRAIGHT EVEN LINE.

7. ALL PROPOSED ELEVATIONS REFER TO FINISHED GRADES.

8. SITE GRADING ELEVATIONS SHALL BE WITHIN 0.1 FOOT OF THE REQUIRED ELEVATION AND ALL AREAS SHALL BE GRADED TO DRAIN.

9. ALL STABILIZED SUBGRADE SHALL HAVE AN FBV OF 75 OR AN LBR OF 40, UNLESS OTHERWISE NOTED. ALL SUBGRADE SHALL BE COMPACTED TO 98% MAXIMUM DRY DENSITY PER AASHTO T-180. STABILIZATION MAY BE SUBSTITUTED WITH AN ADDITIONAL 5.5" OF BASEROCK ON COMPACTED SUBGRADE.

10. ROADWAY BASE COURSE SHALL CONFORM TO THE REQUIREMENTS OF SECTION 200 OR 204 OF FLORIDA'S DEPARTMENT OF TRANSPORTATION STANDARD SPECIFICATIONS. BASE SHALL BE COMPACTED TO 98% PER AASHTO T-180. ALL BASE SHALL BE PRIMED.

11. CONCRETE AND ASPHALT SHALL BE OF THE TYPE DESIGNATED ON THE DRAWINGS.

12. PLASTIC FILTER FABRIC SHALL BE MIRAFI, TYPAR OR EQUAL CONFORMING TO SECTION 985 OF THE FDOT STANDARD SPECIFICATIONS.

13. CONCRETE SIDEWALK SHALL BE 4 INCHES THICK ON COMPACTED SUBGRADE. CRACK CONTROL JOINTS SHALL BE 5 FEET ON CENTER. THE BACK OF SIDEWALK ELEVATION SHALL EQUAL THE CROWN OF ROADWAY, UNLESS OTHERWISE SPECIFIED BY LOCAL CODES, OR SHOWN ON THE DRAWINGS. ALL CONCRETE SIDEWALKS THAT CROSS DRIVEWAYS SHALL BE 6 INCHES THICK WITH 6" X 6" WELDED WIRE MESH REINFORCEMENT.

14. PIPE SPECIFICATIONS: THE MATERIAL TYPE IS SHOWN ON THE DRAWINGS BY ONE OF THE FOLLOWING DESIGNATIONS:

    RCP = REINFORCED CONCRETE PIPE, ASTM DESIGNATION C-76 TABLE III.
    CMP = CORRUGATED METAL (ALUMINUM) PIPE, ASTM DESIGNATION M-196
    CMP (SMOOTH LINED)=CORRUGATED METAL ALUMINUM PIPE (SMOOTH LINES), ASTM DESIGNATION M-196
    SCP = SLOTTED CONCRETE PIPE, FDOT SECTIONS 941 AND 942.
    PVC = POLYVINYL CHLORIDE PIPE
    PCMP= PERFORATED CMP, FDOT SECTION 945
    DIP = DUCTILE IRON PIPE
    HDPE = SMOOTH LINED HIGH DENSITY POLYETHYLENE, AASHTO M294, TYPE-S

15. ALL CONSTRUCTION SHALL BE IN ACCORDANCE WITH THE STANDARDS OF PALM BEACH COUNTY ENGINEERING DEPARTMENT.

16. ASPHALT: BITUMINOUS MATERIAL SHALL BE ASPHALT CEMENT, VISCOSITY GRADE AC-20, CONFORMING TO THE REQUIREMENTS OF FDOT STANDARD SPECIFICATIONS, 1986, EDITION, SECTION 916-1.

    PRIME COAT SHALL BE CUT BACK ASPHALT GRADE RC-70, OR RC-250 CONFORMING TO THE REQUIREMENTS SPECIFIED IN AASHTO DESIGNATION M81-75 (1982) (RATE - 0.10 GALLONS PER SQUARE YARD). TACK COAT SHALL BE EMULSIFIED ASPHALT, GRADE RS-2 CONFORMING TO THE REQUIREMENTS SPECIFIED IN AASHTO DESIGNATION M 140-82 (RATE 0.02 TO 0.08 GALLONS PER SQUARE YARD).

    DESIGN MIX SHALL CONFORM TO FDOT SECTION 331 UNLESS OTHERWISE SHOWN ON THE DRAWINGS.

17. DENSITY TESTS SHALL BE TAKEN AT LOCATIONS AS DIRECTED BY THE ENGINEER.

18. ASPHALTIC CONCRETE SHALL BE OF THE TYPE SPECIFIED IN THE ROADWAY CROSS-SECTIONS.

19. ALL CONCRETE SHALL HAVE A MINIMUM COMPRESSIVE STRENGTH OF 3000 PSI AT 28 DAYS, UNLESS OTHERWISE NOTED.

20. PRECAST CONCRETE MANHOLES AND CATCH BASINS SHALL MEET THE REQUIREMENTS OF ASTM SPECIFICATIONS C-478 AND 64T, AND PALM BEACH COUNTY ENGINEERING DEPARTMENT STANDARDS.

21. CONCRETE FOR PRECAST MANHOLE AND CATCH BASINS SHALL HAVE A MINIMUM COMPRESSIVE STRENGTH OF 4,000 PSI AT 28 DAYS.

22. REINFORCING STEEL FOR MANHOLES AND CATCH BASINS SHALL CONFORM TO ASTM SPECIFICATION A-615 AND A-305, LATEST REVISION.

23. ALL RE-BAR SPLICES IN CONCRETE STRUCTURES SHALL HAVE A MINIMUM LAP OF 24 BAR DIAMETERS.

24. ALL JOINTS IN CONCRETE STRUCTURES SHALL BE FINISHED WATER TIGHT.

25. ALL SPACES AROUND PIPING ENTERING OR LEAVING MANHOLES AND CATCH BASINS SHALL BE COMPLETELY FILLED WITH 2:1 CEMENT MORTAR.

26. ALL CMP SHALL BE HELICAL ALUMINUM UNLESS OTHERWISE NOTED.

27. JOINTS IN CORRUGATED ALUMINUM PIPE SHALL EMPLOY CORRUGATED METAL BANDS OF SIMILAR METAL AND CORRUGATIONS WITH NEOPRENE, RAM-NEK, OR BITUMASTIC GASKETS INSTALLED PER THE MANUFACTURER'S RECOMMENDATIONS. HDPEP PIPE SHALL BE ADS N-12 HP WITH ADS WATER STOP GASKET AT STRUCTURES OR APPROVED EQUAL. JOINTS SHALL BE WRAPPED WITH FILTER FABRIC.

28. REINFORCED CONCRETE PIPE SHALL CONFORM TO THE REQUIREMENTS OF ASTM SPECIFICATION C-76, CLASS III, WALL THICKNESS B , LATEST REVISION, AND AS MODIFIED BY SECTION 941 OF THE FLORIDA DOT STANDARD SPECIFICATIONS, LATEST REVISION.

29. ALL UNDERGROUND WORK SHALL BE COMPLETED PRIOR TO PAVING.

30. ALL HANDICAP SPACES, RAMPS, AND ACCESS AREAS SHALL COMPLY IN STRICT ACCORDANCE WITH THE "2012 FLORIDA ACCESSIBILITY CODE FOR BUILDING CONSTRUCTION" AND THE "2010 ADA STANDARDS FOR ACCESSIBLE DESIGN". ANY DESCREPANCY IN THE CODE OR ON THE PLAN SHALL BE CALLED TO THE ENGINEERS ATTENTION PRIOR TO CONSTRUCTION. WHERE SIDEWALKS CONNECT TO ROADWAYS, THE SIDEWALK SHALL HAVE A DETECTABLE WARNING IN ACCORDANCE WITH FDOT INDEX 304.

31. WHERE CONNECTIONS TO AN EXISTING DRAINAGE SYSTEM ARE PROPOSED, SAID EXISTING DRAINAGE STRUCTURES AND LINES SHALL BE CLEANED OF ALL SILT AND OTHER DEBRIS PRIOR TO SAID CONNECTIONS BEING MADE. WHERE THE EXISTING DRAINAGE SYSTEM INCLUDES DITCHES, SAID DITCHES SHALL BE CLEARED AND REWORKED, AS NECESSARY, TO RESTORE THEM TO AN APPROVED DESIGN SECTION. SYSTEMS ARE TO BE CLEANED AND/OR GRADED TO THE POINT OF LEGAL POSITIVE OUTFALL.

32. ALL DRAINAGE SYSTEMS SHALL BE PUMPED DOWN TO BELOW ONE-THIRD OF THE DIAMETER OF THE PIPE (FROM THE INVERT) AND LAMPED AS A REQUIREMENT OF THE FINAL DRAINAGE INSPECTION.

33. THE CONTRACTOR SHALL FOLLOW THE EARTHWORK RECOMMENDATIONS CONTAINED IN THE GEOTECHNICAL REPORT.

PAVEMENT MARKING AND SIGNING NOTES

1. PAVEMENT MARKINGS AND GEOMETRICS SHALL BE IN ACCORDANCE WITH THE MANUAL ON UNIFORM TRAFFIC CONTROL DEVICES FOR STREETS AND HIGHWAYS AND PALM BEACH COUNTY TYPICAL No. T-P-13.

2. ALL PARKING SPACE PAVEMENT MARKINGS SHALL BE PAINT. ALL OTHER PAVEMENT MARKINGS IN ASPHALT AREAS SHALL BE THERMOPLASTIC. ALL PAVEMENT MARKINGS IN PAVER AREAS SHALL BE REFLECTORIZED COLOR APPROPRIATE PAVERS PER P.B.C. TYPICAL NO. T-P-13 OR REFLECTORIZED EPOXY PAINT.

3. THESE INSTALLATIONS SHALL BE IN ACCORDANCE WITH THE FLORIDA DEPARTMENT OF TRANSPORTATION STANDARD SPECIFICATIONS FOR ROAD AND BRIDGE CONSTRUCTION LATEST EDITION. HOWEVER, WHERE CONFLICTS EXIST, THIS TYPICALLY SHALL TAKE PRECEDENT OVER FDOT STANDARD SPECIFICATIONS.

4. ALL REFLECTIVE PAVEMENT MARKERS SHALL BE APPROVED BY PALM BEACH COUNTY TRAFFIC ENGINEERING BEFORE INSTALLATION.

5. ONE BLUE REFLECTOR SHALL BE PLACED AT ALL FIRE HYDRANT LOCATIONS IN THE CENTER OF THE ADJACENT TRAVEL LANE.

6. ALL R1-1, R2-1 AND D3's SHALL BE HIGH INTENSITY MATERIAL & SHALL BE IN ACCORADANCE WITH PALM BAECH COUNTY TYPICAL T-P-13.

7. TEMPORARY PAVEMENT MARKINGS ON FIRST LIFT OF ASPHALT SHALL BE PAINT.

GENERAL NOTES

1. UNDER FLORIDA STATUTES, THE CONTRACTOR MUST PROVIDE A 48 HOUR NOTIFICATION PRIOR TO ANY OPERATION WHICH WOULD "PIERCE THE EARTH'S SURFACE" WITH THE WORK STARTED WITHIN FIVE WORKING DAYS AFTER ALL UNDERGROUND UTILITIES HAVE BEEN IDENTIFIED. THE NOTIFICATION NUMBER IS A ONE CALL SYSTEM STATEWIDE AT (800) 432-4770 . FAILURE TO COMPLY COULD RESULT IN FINES AND DAMAGES.

   UNIVERSAL COLOR CODE FOR MARKING UNDERGROUND UTILITY LINES

RED	ELECTRIC
YELLOW	GAS-OIL
ORANGE	COMMUNICATION, CATV
BLUE	WATER
GREEN	SEWER
PINK	SURVEY MARKINGS
WHITE	PROPOSED EXCAVATION

2. THE LOCATION AND SIZE OF ALL EXISTING UTILITIES AND TOPOGRAPHY HAS BEEN PREPARED FROM THE MOST RELIABLE INFORMATION AVAILABLE TO THE ENGINEER. THIS INFORMATION IS NOT GUARANTEED AND IT IS THE CONTRACTOR'S RESPONSIBILITY TO DETERMINE THE EXACT LOCATION OF ANY EXISTING UTILITIES AND TOPOGRAPHY PRIOR TO CONSTRUCTION. THE CONTRACTOR SHALL VERIFY ALL UTILITIES, BY ELECTRONIC METHODS AND BY HAND EXCAVATION IN COORDINATION WITH ALL UTILITY COMPANIES. PRIOR TO BEGINNING ANY CONSTRUCTION OPERATIONS. ANY AND ALL CONFLICTS OF EXISTING UTILITIES WITH PROPOSED IMPROVEMENTS SHALL BE RESOLVED BY THE ENGINEER PRIOR TO BEGINNING ANY CONSTRUCTION OPERATIONS. THIS WORK BY THE CONTRACTOR SHALL BE CONSIDERED INCIDENTAL TO THE CONTRACT AND NO ADDITIONAL COMPENSATION SHALL BE ALLOWED.

3. PRIOR TO CONSTRUCTION, THE CONTRACTOR SHALL NOTIFY THE FOLLOWING UTILITY COMPANIES IF APPLICABLE.

   F P & L - CHARLES ARTHUS, 561-742-2085
   A T & T - ROBERT LOWEN, 561-357-6615
   P. B. CO. WATER UTILITIES DEPT. - ADAM GALICKI, 561-493-6000
   COMCAST - STEVEN ROSA, 561-454-5851
   PALM BEACH COUNTY ENGINEERING DEPARTMENT - 561-684-4180
   LAKE WORTH DRAINAGE DISTRICT - SHAUGHN WEBB, 561-498-5363
   FLORIDA PUBLIC UTILITIES - NANI SANTIAGO, 561-838-1785
   PBC TRAFFIC ENGINEERING SUPERINTENDENT - 561-233-3900

4. THE CONTRACTOR SHALL BE RESPONSIBLE FOR THE REPAIR AND RESTORATION OF EXISTING PAVEMENT, PIPES, CONDUITS, CABLES, ETC., AND LANDSCAPED AREAS DAMAGED AS A RESULT OF THE CONTRACTOR'S OPERATIONS AND/OR THOSE OF HIS SUBCONTRACTORS, AND SHALL RESTORE THEM PROMPTLY.

5. PRIOR TO FINAL ACCEPTANCE, THE CONTRACTOR SHALL SUPPLY THE ENGINEER OF RECORD WITH THE CERTIFICATION THAT ALL CONSTRUCTION AND MATERIALS MEET OR EXCEEDS THE DESIGN AND HAS BEEN INSTALLED PER THE DRAWINGS AND/OR AS-BUILT DRAWINGS.AS-BUILT DRAWINGS SHALL BE PREPARED BY THE CONTRACTOR.

6. THE CONTRACTOR SHALL COORDINATE THE WORK WITH OTHER CONTRACTORS IN THE AREA AND ANY OTHER UNDERGROUND CONDUIT REQUIRED FOR FP&L, SOUTHERN BELL, IRRIGATION SYSTEM, ETC. PRIOR TO BEGINNING SUBGRADE. THE CONTRACTOR SHALL COORDINATE RELOCATION OF ALL EXISTING UTILITIES WITH APPLICABLE UTILITY COMPANIES.

7. THE CONTRACTOR SHALL SUBMIT FIVE (5) SETS OF SHOP DRAWINGS FOR APPROVAL TO THE ENGINEER OF RECORD PRIOR TO FABRICATION OR CONSTRUCTION FOR ALL MATERIALS USED ON THE PROJECT. APPROVED SHOP DRAWINGS FROM THE ENGINEER SHALL THEN BE SUBMITTED TO THE COUNTY OR CITY FOR THEIR APPROVAL. NO CONSTRUCTION SHALL COMMENCE UNTIL THE APPROVED SHOP DRAWINGS HAVE BEEN OBTAINED BY THE CONTRACTOR FROM THE ENGINEER.

8. COMPLIANCE TO "TRENCH SAFETY ACT" IS REQUIRED FOR ALL EXCAVATIONS IN EXCESS OF 5 FEET DEEP.

9. GATE VALVES SHALL BE LOCATED ENTIRELY WITHIN THE PAVEMENT OR GRASS AND COMPLETELY OUTSIDE OF CURBS.

PALM BEACH COUNTY ROAD & BRIDGE NOTES

1. IF DURING THE PROPOSED CONSTRUCTION OR CROSSING OF ANY EXISTING PALM BEACH COUNTY STORM DRAIN PIPE / STRUCTURES ARE AFFECTED IN ANY WAY, PALM BEACH COUNTY ROAD & BRIDGE REQUIRES FULL RESTORATION OF THE AFFECTED SYSTEM TO LIKE OR BETTER THAN LIKE CONDITION AND TO PALM BEACH COUNTY / FDOT STANDARDS.

2. ALL AFFECTED ROADWAYS ARE TO BE RESTORED FROM EDGE OF PAVEMENT TO EDGE OF PAVEMENT, LANE WIDTH MINIMUM, AND 50' IN EITHER DIRECTION.

3. IF ANY ADDITIONAL LANES ARE AFFECTED FOR ANY REASON DURING CONSTRUCTION, PALM BEACH COUNTY ROAD & BRIDGE WILL REQUIRE THE ADDITIONAL LANES TO BE RESTORED TO LIKE OR BETTER THAN LIKE CONDITION AND TO EQUAL DIMENSIONS AS THE ADJACENT LANES.

4. IF PALM BEACH COUNTY SIDEWALK / PATHWAY / CURB & GUTTER / OR ADA FACILITIES ARE AFFECTED, PALM BEACH COUNTY ROAD & BRIDGE WILL REQUIRE RESTORATION OF ONE ADDITIONAL FLAG IN EITHER DIRECTION FROM THE POINT OF CONSTRUCTION AND TO BE LIKE OR BETTER THAN LIKE CONDITION AND CONSTRUCTED TO FDOT / PALM BEACH COUNTY STANDARDS.

5. ALL SWALES, MEDIANS AND GRASS AREAS ARE TO BE RESTORED TO LIKE OR BETTER THAN LIKE CONDITION.

ACCESSIBILITY NOTES:

1. CROSS SLOPE OF ALL ACCESSIBLE ROUTES CANNOT BE MORE THAN 2%, INCLUDING CURB RAMPS AND ASSOCIATED GUTTERS AND CROSS WALKS. WHERE GUTTERS MEET CURB RAMPS, RUNNING SLOPES MUST NOT EXCEED 5%.
2. RUNNING SLOPE ALONG ACCESSIBLE ROUTES MUST BE NO MORE THAN 5% IN THE DIRECTION OF TRAVEL. IF RUNNING SLOPES OF ACCESSIBLE ROUTES ARE MORE THAN 5%, THEN ALL RAMP CRITERIA APPLY.
3. RUNNING SLOPE OF RAMPS AND CURB RAMPS CANNOT EXCEED 8.33%. IF THE VERTICAL RISE IS LESS THAN 6 INCHES, HANDRAILS ARE NOT REQUIRED. SIDE FLARES OR CURB RAMPS MUST HAVE A RUNNING SLOPE NO MORE THAN 10%.
4. SLOPE AT THE INTERSECTIONS OF ACCESSIBLE ROUTES CANNOT EXCEED 2% WHEN MEASURED IN ANY DIRECTION.
5. THE GROUND SURFACE OF THE ENTIRE ACCESSIBLE PARKING SPACES AND THE ADJACENT ACCESS AISLE SERVING THE SPACE CANNOT EXCEED 2% WHEN MEASURED IN ANY DIRECTION. WHERE GUTTERS ARE PART OF THE ACCESSIBLE PARKING SPACE, THE GUTTERS MUST HAVE A SLOPE NO MORE THAN 2%. OTHERWISE, THEY MUST BE LOCATED OUTSIDE OF THE MINIMUM AREA REQUIRED FOR AN ACCESSIBLE PARKING SPACE AND THE ADJACENT ACCESS AISLE SERVING THE SPACE.
6. THE GROUND SURFACE AT THE MANEUVERING CLEARANCE OF DOORS THAT ARE PART OF THE ACCESSIBLE ROUTE CANNOT EXCEED 2% WHEN MEASURED IN ANY DIRECTION, FOR THE WIDTH OF THE DOOR BY 60 INCHES MEASURED PERPENDICULAR TO THE DOOR WALL.
7. SLOPE OF CLEAR FLOOR SPACES FOR FIXTURES AND CONTROLS MUST BE NO MORE THAN 2% WHEN MEASURED IN ANY DIRECTION. FOR EXAMPLE, THE 30X48-INCH CLEAR FLOOR SPACE PROVIDED FOR THE PARKING METER OR A MAGNETIC CARD READER MUST BE FLUSH AND ADJACENT TO THE METER OR THE CARD READER.
8. LEVEL CHANGES BETWEEN GROUND SURFACE MATERIALS: E.G.: PAVERS TO CONCRETE MUST BE NO MORE THAN 1/4-INCH HIGH. LEVEL CHANGES GREATER THAN 1/4-INCH HIGH MUST BE BEVELED WITH A SLOPE THAT DOES NOT EXCEED 1:2 FOR A LEVEL CHANGE UP TO 1/2-INCH HIGH. IF THERE IS A LEVEL CHANGE GREATER THAN 1/2-INCH, THEN THE LEVEL CHANGE MUST BE RAMPED AND COMPLY WITH THE RAMP CRITERIA.
9. GAPS OR OPENINGS ALONG THE ACCESSIBLE ROUTE MUST BE NO MORE THAN 1/2-INCH WIDE.
10. MINIMUM WIDTH OF ACCESIBLE ROUTE IS 36".
11. ALL HANDICAP RAMPS SHALL BE INSTALLED PER FDOT INDEX 304.

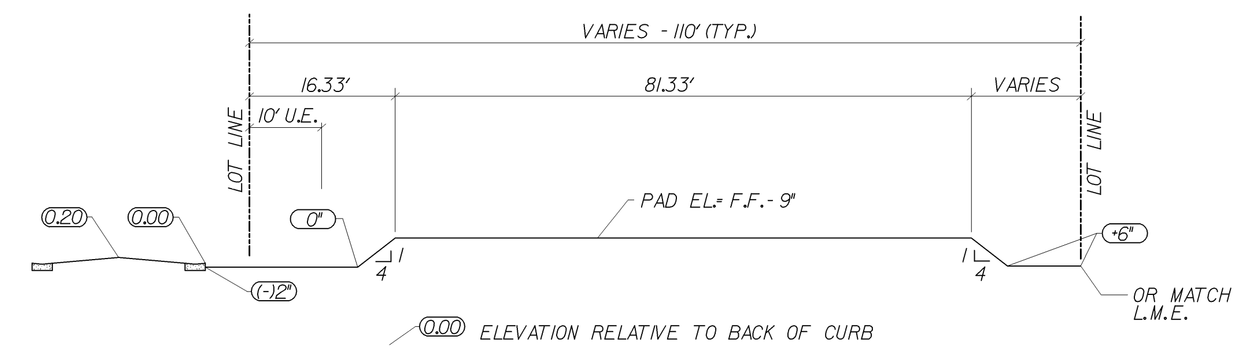

PROFILE VIEW

35' PRODUCT (45'x110' LOTS)
PAD DETAIL FOR MASS EARTHWORK OPERATION

N.T.S.

NOTES:

1. ALL LOTS SHALL BE CONSTRUCTED AS STRIP PADS.
2. PADS BUILT WITH COMPACTED STRUCTURAL FILL TO FIVE FEET BEYOND THE BUILDING LIMITS (PER FLORIDA BUILDING CODE). PROOF ROLL ENTIRE LOT.
3. GRADING TOLERANCE OF 0.1' ABOVE OR BELOW THE PAD GRADE NOTED ON THE DETAIL.
4. PROOF ROLL ENTIRE SITE LESS THE LAKES PRIOR TO PLACEMENT OF FILL AFTER CLEANSING & FILLING OF DITCHES PER GEOTECH.

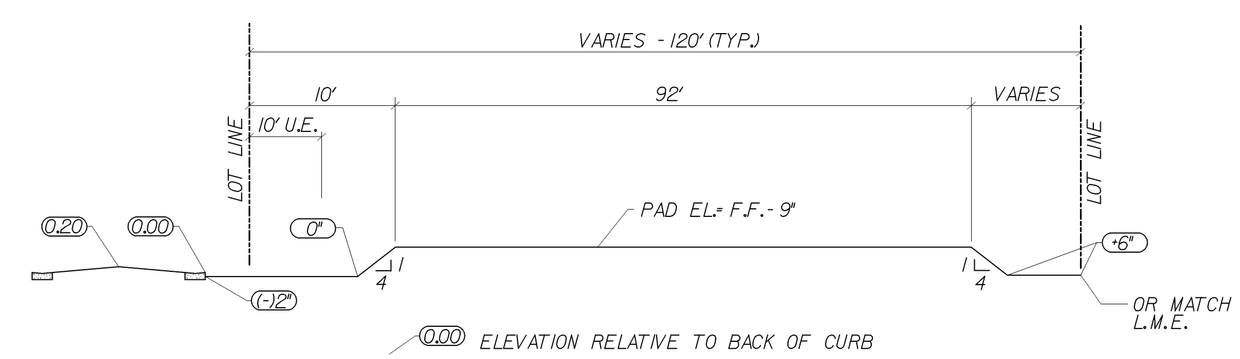

PROFILE VIEW

40' PRODUCT (50'x120' LOTS)
PAD DETAIL FOR MASS EARTHWORK OPERATION

N.T.S.

NOTES:

1. ALL LOTS SHALL BE CONSTRUCTED AS STRIP PADS.
2. PADS BUILT WITH COMPACTED STRUCTURAL FILL TO FIVE FEET BEYOND THE BUILDING LIMITS (PER FLORIDA BUILDING CODE). PROOF ROLL ENTIRE LOT.
3. GRADING TOLERANCE OF 0.1' ABOVE OR BELOW THE PAD GRADE NOTED ON THE DETAIL.
4. PROOF ROLL ENTIRE SITE LESS THE LAKES PRIOR TO PLACEMENT OF FILL AFTER CLEANSING & FILLING OF DITCHES PER GEOTECH.

TOWNHOUSE
PAD DETAIL FOR MASS EARTHWORK OPERATION

N.T.S.

NOTES:

1. BUILDING PAD SHALL BE BUILT WITH COMPACTED STRUCTURAL FILL ELEVEN (11) INCHES BELOW PROPOSED FINISHED FLOOR,FIVE FEET BEYOND THE BUILDING LIMITS SHOWN (PER FLORIDA BUILDING CODE). PROOF ROLL ENTIRE LOT.
2. GRADING TOLERANCE OF 0.1' ABOVE OR BELOW THE PAD GRADE.
3. PROOF ROLL ENTIRE SITE PRIOR TO PLACEMENT OF FILL AFTER CLEARING & GRUBBING AND CLEANSING & FILLING OF DITCHES PER THE GEOTECHNICAL REPORT.

SCHNARS
ENGINEERING CORPORATION
947 Clint Moore Road
Boca Raton, Florida 33487
Certificate of Authorization #6640
Tel: (561) 241-6455
Fax: (561) 241-5182

OWNER: PULTE HOMES CORPORATION
1400 INDIAN CREEK PARKWAY
JUPITER, FLORIDA 33458

PROJECT: FIELDS AT GULFSTREAM POLO
PLAT ONE
PALM BEACH COUNTY FLORIDA

TASK: CONSTRUCTION DETAILS

ORIGINAL: APRIL 2016
REVISIONS: 1 2 3 4 5 6 7 8 9 10 11 12

SEAL

Jeffrey T. Schnars, P.E.
Civil Engineer
Florida Registration No. 46697
FOR THE FIRM

JOB NO. 14132
DRAWN RAD
DESIGNED JTS
CHECKED JWM
Q.C. JTS
SHEET 21 OF 23

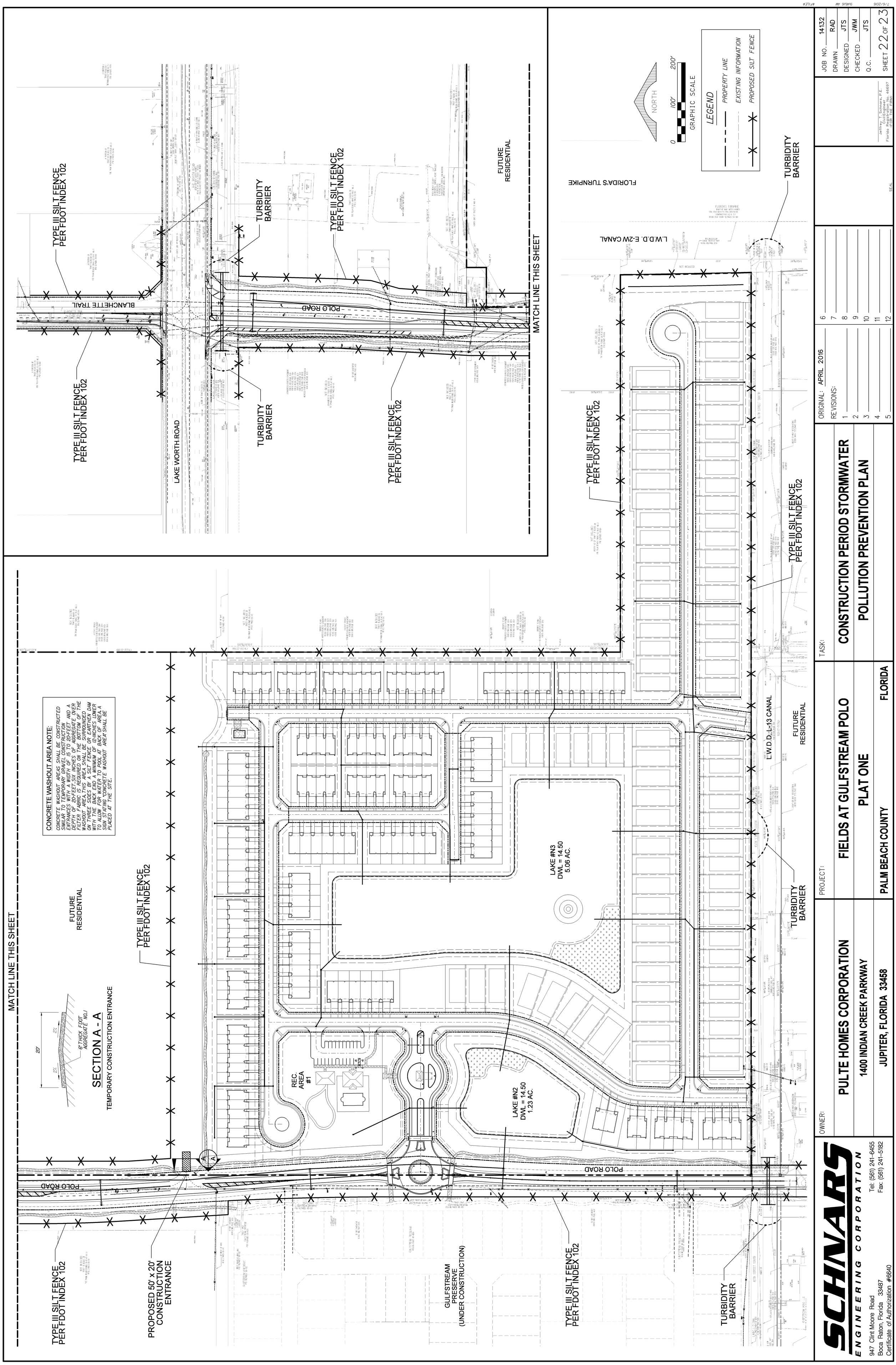
TYPE III SILT FENCE PER FDOT INDEX 102
TURBIDITY BARRIER
BLANCHETTE TRAIL
POLO ROAD
LAKE WORTH ROAD
FUTURE RESIDENTIAL
MATCH LINE THIS SHEET
FLORIDA'S TURNPIKE
L.W.D.D. E-2W CANAL
NORTH
GRAPHIC SCALE
0 100' 200'
LEGEND
PROPERTY LINE
EXISTING INFORMATION
PROPOSED SILT FENCE
NOT INCLUDED
L.W.D.D. L-13 CANAL
LAKE #N3 DWL = 14.50 5.06 AC.
LAKE #N2 DWL = 14.50 1.23 AC.
REC. AREA #1
CONCRETE WASHOUT AREA NOTE:
CONCRETE WASHOUT AREAS SHALL BE CONSTRUCTED SIMILAR TO TEMPORARY GRAVEL CONSTRUCTION ENTRANCES WITH A WIDTH OF 15 TO 20-FEET AND A DEPTH OF 20-FEET. SIX INCHES OF AGGREGATE OVER FILTER FABRIC IS REQUIRED ON THE BOTTOM OF THE WASHOUT AREA. THIS AREA SHALL BE SURROUNDED ON THREE SIDES BY A SILT FENCE OR EARTHEN DAM WITH THE BACK END A MINIMUM OF 12-INCHES LOWER TO ALLOW FOR WATER TO POOL AT BACK OF AREA. A SIGN STATING "CONCRETE WASHOUT AREA" SHALL BE PLACED AT THE SITE.
SECTION A - A
TEMPORARY CONSTRUCTION ENTRANCE
6" THICK FDOT AGGREGATE NO.1
20'
2'
PROPOSED 50' x 20' CONSTRUCTION ENTRANCE
GULFSTREAM PRESERVE (UNDER CONSTRUCTION)
JOB NO. 14132
DRAWN RAD
DESIGNED JTS
CHECKED JWM
Q.C. JTS
SHEET 22 OF 23
Jeffrey T. Schnars, P.E.
Civil Engineer
Florida Registration No. 46697
(FOR THE FIRM)
SEAL
ORIGINAL: APRIL 2016
REVISIONS:
1
2
3
4
5
6
7
8
9
10
11
12
TASK:
CONSTRUCTION PERIOD STORMWATER POLLUTION PREVENTION PLAN
PROJECT:
FIELDS AT GULFSTREAM POLO PLAT ONE
PALM BEACH COUNTY
FLORIDA
OWNER:
PULTE HOMES CORPORATION
1400 INDIAN CREEK PARKWAY
JUPITER, FLORIDA 33458
SCHNARS
ENGINEERING CORPORATION
947 Clint Moore Road
Boca Raton, Florida 33487
Certificate of Authorization #6640
Tel: (561) 241-6455
Fax: (561) 241-5182

EROSION AND SEDIMENTATION CONTROL NOTES

1. ALL SEDIMENT CONTROL MEASURES ARE TO BE ADJUSTED TO MEET FIELD CONDITIONS AT THE TIME OF CONSTRUCTION AND BE CONSTRUCTED PRIOR TO ANY GRADING OR DISTURBANCE OF EXISTING SURGACE MATERIAL ON BALANCE OF SITE. PERIMETER SEDIMENT BARRIERS SHALL BE CONSTRUCTED TO PREVENT SEDIMENT OR TRASH FROM FLOWING OR FLOATING ON TO ADJACENT PROPERTIES.
2. SEDIMENT WILL BE PREVENTED FROM ENTERING ANY STORM DRIAN SYSTEM, DITCH OR CHANNEL. ALL STORM SEWER INLETS THAT ARE MADE OPERABLE DURING CONSTRUCTION SHALL BE PROTECTED SO THAT SEDIMENT-LADEN WATER CANNOT ENTER THE CONVEYANCE SYSTEM WITHOUT FIRST BEING FILTERED OR OTHERWISE TREATED TO REMOVE SEDIMENT.
3. BEFORE TEMPORARY OR NEWLY CONSTRUCTED STROMWATER CONVEYANCE CHANNELS ARE MADE OPERATIONAL, ADEQUATE OUTLET PROTECTION AND ANY REQUIRED TEMPORARY OR PERMANENT CHANNEL LINING SHALL BE INSTALLED IN BOTH THE CONVEYANCE CHANNEL AND RECEIVING CHANNEL.
4. PERIODIC INSPECITON AND MAINTENANCE OF ALL SEDIMENT CONTROL STRUCTURES MUST BE PROVIDED TO ENSURE INTENDED PURPOSE IS ACCOMPLISHED. THE DEVELOPER, OWNER AND/OR CONTRACTOR SHALL BE CONTINUALLY RESPONSIBLE FOR ALL SEDIMENT LEAVING THE PROPERTY. SEDIMENT CONTROL MEASURES SHALL BE IN WORKING CONDITION AT THE END OF EACH WORKING DAY.
5. WHERE CONSTRUCITON VEHICLE ACCESS ROUTES INTERSECT PAVED PUBLIC ROADS, PROVISIONS SHALL BE MADE TO MINIMIZE THE TRANSPORT OF SEDIMENT BY TRACKING ONTO THE PAVED SURFACE, WHERE SEDIMENT IS TRANSPORTED ONTO A PUBLIC ROAD SURFACE WITH CURBS AND GUTTERS, THE ROAD SHALL BE CLEANED THOROUGHLY AT THE END OF EACH DAY. SEDIMENT SHALL BE REMOVED FORM THE ROADS BY SHOVELING OR SWEEPING AND TRANSPORTED TO A SEDIMENT CONTROL DISPOSAL AREA. STREET WASHING SHALL BE ALLOWED ONLY AFTER SEDIMENT IS REMOVED IN THIS MANNER. THIS PROVISION SHALL APPLY TO INDIVIDUAL SUBDIVISION LOTS AS WELL AS TO LARGER LAND-DISTRIBUTING ACTIVITIES.
6. ALL TEMPORARY EROSION AND SEDIMENT CONTROL MEASURES SHALL BE REMOVED WITHIN 30 DAYS AFTER FINAL SITE STABILIZATION OR AFTER THE TEMPORATY MEASURES ARE NO LONGER NEEDED, IN THE OPINION OF THE REVIEWER. DISTURBED SOIL AREAS RESULTING FROM THE DISPOSITION OF TEMPORARY MEASURES SHALL BE PERMANENTLY STABILIZED TO PREVENT FURTHER EROSION AND SEDIMENTATION.
7. PROPERTIES AND WATERWAYS DOWNSTREAM FROM CONSTRUCTION SITE SHALL BE PROTECTED FROM SEDIMENT DISPOSITION AND EROSION.
8. EROSION CONTROL DESIGN AND CONSTRUCTION SHALL FOLLOW THE REQUIREMENTS IN INDEC NOS. 101, 102 AND 103 OF FDOT ROWDWAY AND TRAFFIC DESIGN STANDARDS.
9. THE ENGINEER MAY APPROVE MODIFICATIONS OR ALTER PLANS TO THESE EROSION CONTROL CRITERIA DUE TO SITE SPECIFIC CONDITIONS.
10. FILTER FABRIC SHALL BE INSTALLED ON ALL DRAINAGE INLET TOPS AND SOD SHALL BE PLACED AROUND DITCH BOTTOM INLETS TO PREVENT DEBRIS AND SILTATION FROM ENTERING DRAINAGE SYSTEM DURING CONSTRUCTION.
11. SILT FENCES OR STRAW BALES SHALL BE UTILIZED AT INLETS AND ALONG PROPERTY LINES TO RETAIN SEDIMENT ON THE SITE. A TRENCH SHALL BE EXCAVATED THE WIDTH OF A BALE AND FOUR INCHES DEEP. EACH BALE SHALL BE ANCHORED BY AT LEAST TWO STAKES.
12. WATER TRUCKS SHALL BE UTILIZED TO MINIMIZE WIND EROSION.
13. A CONSTRUCTION ENTRANCE SHALL BE CONSTRUCTED AND CONTAIN AN AGGREGATE LAYER (FDOT AGGREGATE NO. 1) AT LEAST SIX INCHES THICK. IT MUST EXTEND TO THE FULL WIDTH OF THE VEHICULAR INGRESS AND EGRESS AREA. THE LENGTH OF THE ENTRANCE MUST BE AT LEAST 50 FEET.
14. IF THE CONDITIONS ON THE SITE ARE SUCH THAT MUD IS NOT REMOVED BY THE VEHICLES TRAVELING OVER THE GRAVEL ENTRANCE ROAD, THEN THE TIRES OF THE VEHICLES MUST BE WASHED BEFORE ENTERING A PUBLIC ROAD. WASH WATER MUST BE CARRIED AWAY FROM THE ENTRANCE TO A SETTLING AREA TO REMOVE SEDIMENT.
15. THE LIMEROCK SHALL BE INSTALLED IMMEDIATELY AFTER THE FINISHED GRADING IS COMPLETE ON THE ROAD AND PARKING LOT SUBGRADE.
16. LAKE BANKS SHALL BE SEED AND MULCHED OR SODDED IMMEDIATELY AFTER FINAL GRADING.
17. TRUCKS ENTERING AND EXITING THE SITE WITH FILL MATERIAL SHALL BE COVERED.
18. DISCHARGE FROM DEWATERING OPERATIONS SHALL BE RETAINED ONSITE IN A CONTAINMENT AREA.
19. EXPOSED SOIL SHALL BE PLANTED WITH VEGETATIVE MATERIAL OR COVERED WITH PROTECTIVE GROUND COVER AS SOON AS PRACTICAL UPON COMPLETION OF CONSTRUCTION ACTIVITIES.

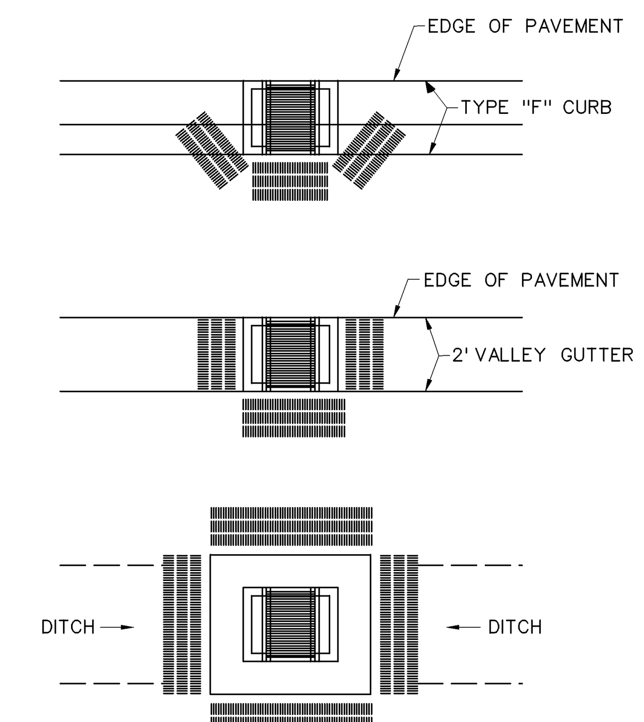

ANCHOR BALES WITH 2- 2"x2"x4' STAKES PER BALE

PER FDOT INDEX No.102

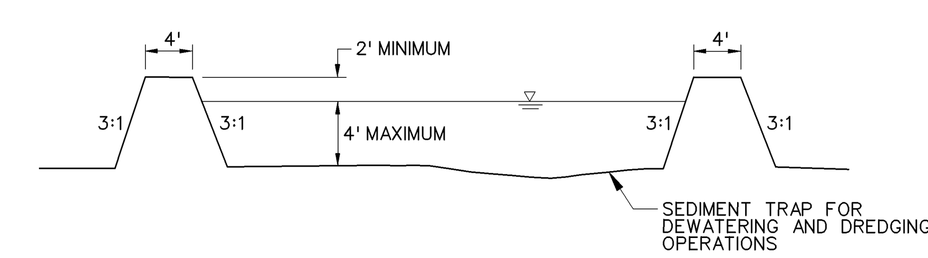

NOTE:
LOCATION OF TEMPORARY SEDIMENT TRAPS TO BE DETERMINED BY CONTRACTOR

SEDIMENT TRAP DETAIL

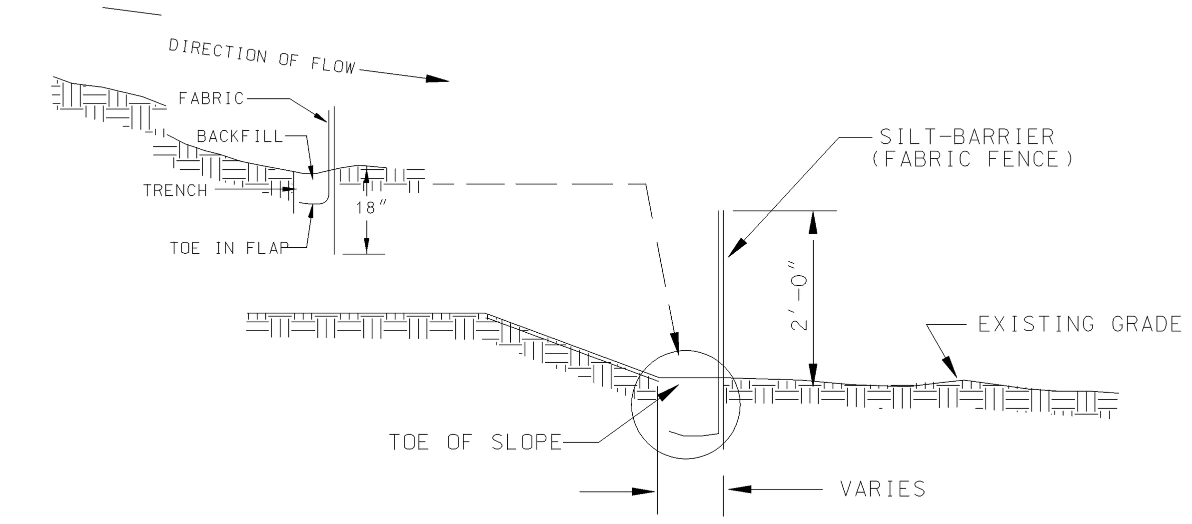

FABRIC FENCE SILT-BARRIER

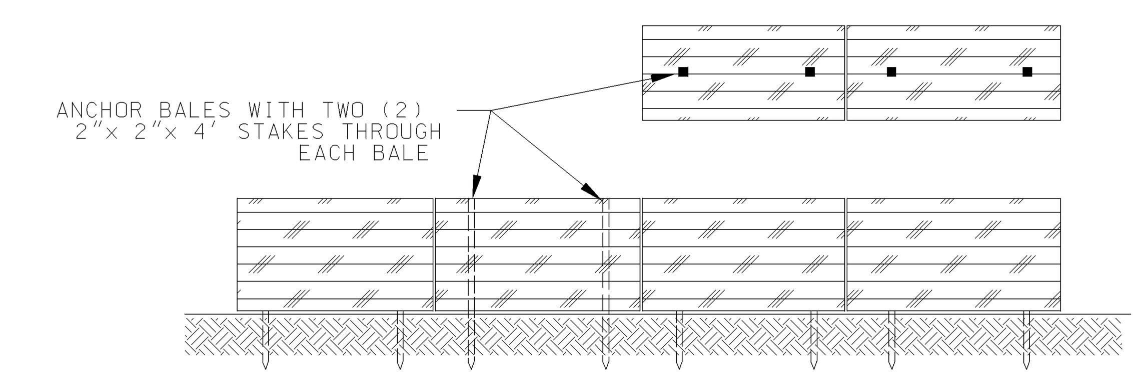

BALED HAY SILT-BARRIER

PERIMETER EROSION AND SEDIMENT CONTROL

NOTES:
1. CONTRACTOR IS REQUIRED TO PREVENT ANY SEDIMENT TRANSPORT FROM THE PROJECT SITE ON TO ADJACENT PROPERTY. INSTALLATION OF EITHER BALED HAY OR FABRIC FENCE TYPE SILT BARRIER IS ACCEPTABLE. THE BARRIER MUST REMAIN IN PLACE UNTIL UPLAND VEGETATION IS ESTABLISHED.
2. BEFORE REMOVING SILT BARRIER, CONTRACTOR SHALL COLLECT AND DISPOSE OF ANY ACCUMULATED SILT.

SILT BARRIER DETAIL

LEGEND

- Pile Locations
- Dredge Or Fill Area
- Mooring Buoy w/Anchor
- Anchor
- Barrier Movement Due To Current Action

GENERAL NOTES

1. Floating turbidity barriers are to be paid for under the contract unit price for Floating Turbidity Barrier, LF.
2. Staked turbidity barriers are to be paid for under the contract unit price for Staked Turbidity Barrier, LF.

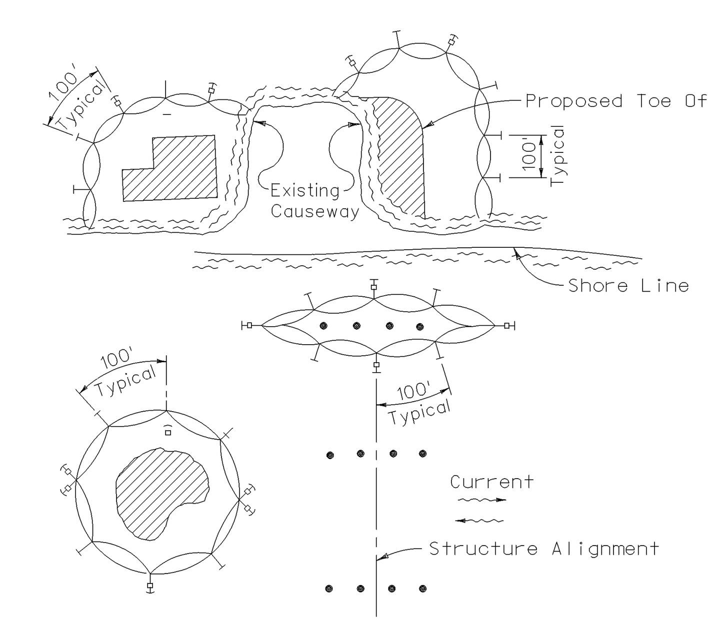

NOTES:

1. Turbidity barriers are to be used in allpermanent bodies of water regardless of water depth.
2. Number and spacing of anchors dependent on current velocities.
3. Deployment of barrier around pile locations may vary to accommodate construction operations.
4. Navigation may require segmenting barrier during construction operations.
5. For additional information see Section 104 of the Standard Specifications.

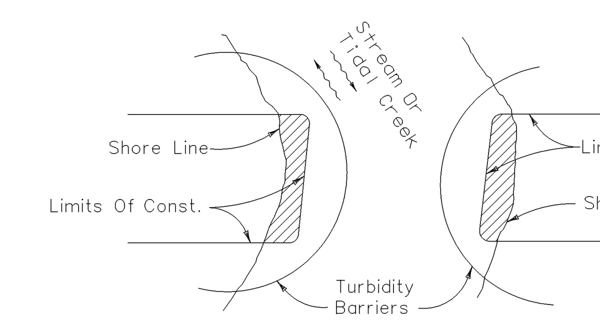

Note:
Turbidity barriers for flowing streams and tidal creeks may be either floating, or staked types or any combinations of types that will suit site conditions and meet erosion controland water quality requirements. The barrier type(s) will be at the Contractors option unless otherwise specified in the plans. however payment will be under the pay item(s) established in the plans for Floating Turbidity Barrier and/or Staked Turbidity Barrier. Posts in staked turbidity barriers to be installed in vertical position unless otherwise directed by the Engineer.

TURBIDITY BARRIER APPLICATIONS

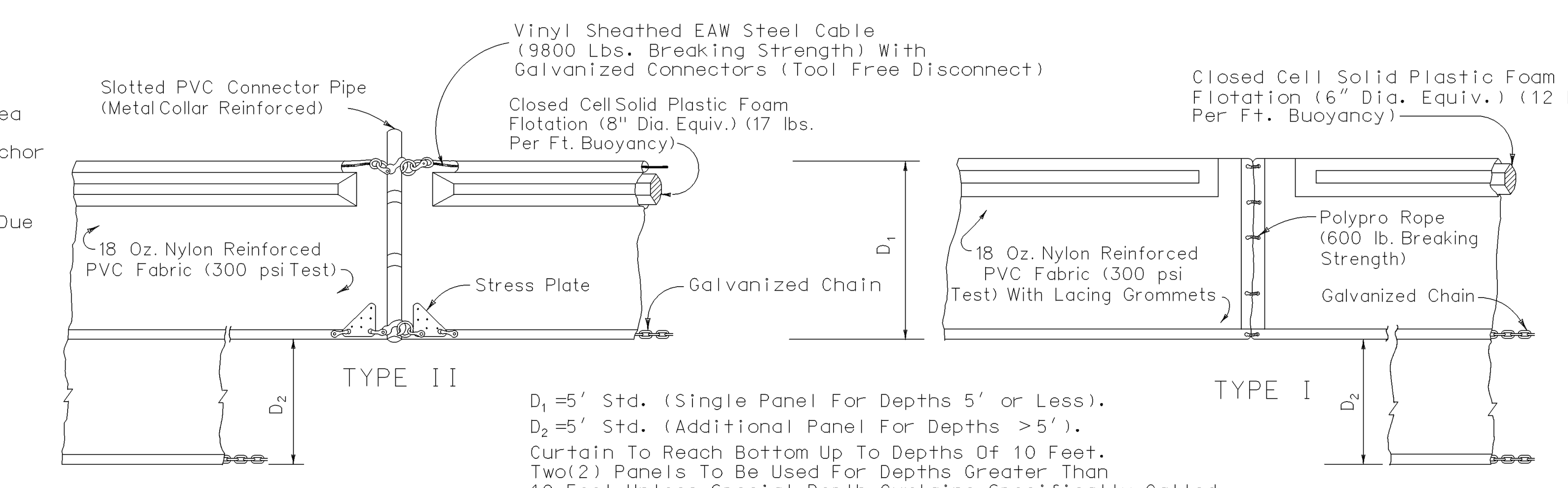

D_1 =5' Std. (Single Panel For Depths 5' or Less).
D_2 =5' Std. (Additional Panel For Depths >5').
Curtain To Reach Bottom Up To Depths Of 10 Feet. Two(2) Panels To Be Used For Depths Greater Than 10 Feet Unless Special Depth Curtains Specifically Called For In The Plans Or As Determined By The Engineer.

NOTICE: COMPONENTS OF TYPES I AND II MAY BE SIMILAR OR IDENTICAL TO PROPRIETARY DESIGNS. ANY INFRINGEMENT ON THE PROPRIETARY RIGHTS OF THE DESIGNER SHALL BE THE SOLE RESPONSIBILITY OF THE USER. SUBSTITUTIONS FOR TYPES I AND II SHALL BE AS APPROVED BY THE ENGINEER.

FLOATING TURBIDITY BARRIERS

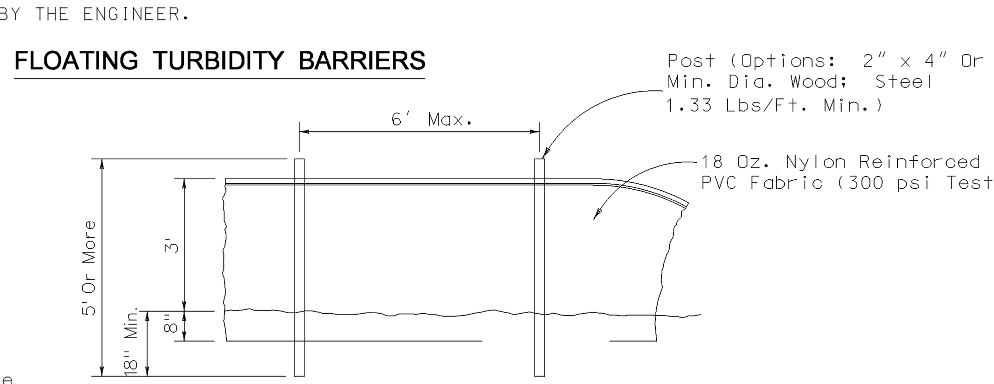

STAKED TURBIDITY BARRIER

TURBIDITY BARRIER DETAILS PER FDOT INDEX NO. 103

SCHNARS ENGINEERING CORPORATION 947 Clint Moore Road Boca Raton, Florida 33487 Certificate of Authorization #6640 Tel: (561) 241-6455 Fax: (561) 241-5182	OWNER: PULTE HOMES CORPORATION 1400 INDIAN CREEK PARKWAY JUPITER, FLORIDA 33458	PROJECT: FIELDS AT GULFSTREAM POLO PLAT ONE PALM BEACH COUNTY FLORIDA	TASK: STORMWATER POLLUTION PREVENTION DETAILS	ORIGINAL: APRIL 2016 REVISIONS: 1 2 3 4 5 6 7 8 9 10 11 12	SEAL Jeffrey T. Schnars, P.E. Civil Engineer Florida Registration No. 46697 (FOR THE FIRM) JOB NO. 14132 DRAWN RAD DESIGNED JTS CHECKED JWM Q.C. JTS SHEET 23 OF 23

STAFF REPORT DISTRIBUTION LIST

FIELDS AT GULFSTREAM POLO PLAT ONE

Application No: 160617-4

Permit No: 50-11013-P

INTERNAL DISTRIBUTION

X Caroline Hanes
X Joseph D. Santangelo
X Carlos A. de Rojas, P.E.
X Barbara J. Conmy
X A. Waterhouse, P.E.
X J. Markle, P.E.

EXTERNAL DISTRIBUTION

X Permittee - Pulte Home Corporation
X Engr Consultant - Schbars Engineering Corporation
X Env Consultant - E W Consultants Inc

GOVERNMENT AGENCIES

X Danielle Slaterpryce, P.E., Assistant City Administrator
X Div of Recreation and Park - District 5 - Miranda Cunningham, FDEP
X Lake Worth Drainage District
X Palm Beach County - Environmental Res Management
X Palm Beach County - Health Dept Environmental Health & Engineering
X Palm Beach County - Water Utilities Operations Center
X Palm Beach County School District of Palm Beach County
X Palm Beach County Engineer

STAFF REPORT DISTRIBUTION LIST

ADDRESSES

Pulte Home Corporation
1400 Indian Creek Parkway
Jupiter FL 33458

Schbars Engineering Corporation
947 Clint Moore Road
Boca Raton FL 33487

E W Consultants Inc
1000 S E Monterey Commons Blvd Ste 208
Stuart FL 34996

Danielle Slaterpryce, P.E., Assistant City Administrator
City Of West Palm Beach
401 Clematis Street
West Palm Beach FL 33402
dslaterpryce@wpb.org

Div of Recreation and Park - District 5 - Miranda Cunningham, FDEP
13798 Se Federal Highway
Hobe Sound FL 33455
miranda.cunningham@dep.state.fl.us

Lake Worth Drainage District
13081 S. Military Trail
Delray Beach FL 33484
pmartin@lwdd.net

Palm Beach County - Environmental Res Management
2300 N. Jog Road
4th Floor
West Palm Beach FL 33411-2743
bgentry@pbcgov.org

Palm Beach County - Health Dept Environmental Health & Engineering
800 North Clematis Street
West Palm Beach FL 33401
henry.hardman@flhealth.gov

Palm Beach County - Water Utilities Operations Center
8100 Forest Hill Boulevard
West Palm Beach FL 33413-3336
mrawls@pbcwater.com

Palm Beach County School District of Palm Beach County
3300 Summit Blvd
West Palm Beach FL 33406-1492
chad.girard@palmbeachschools.org

Palm Beach County Engineer
2300 N. Jog Road
West Palm Beach FL 33411
gwebb@pbcgov.org